Vision™ dual-sided ice and beverage dispensers

VU300 Series

VU300M20 series – dual-sided dispensers

VU300M20DP – 20 Cornelius UFB1 push-button valves*, 115/60/1
VU300M20DL – 20 Cornelius UFB1 sanitary lever valves*, 115/60/1

Note: Lancer LEV valves available at no additional cost. Add -LAN to model numbers (for Coke users only).

* Standard valve configuration; other configurations available; contact factory at (800) 523-9361 or see price list (form# 4025).

VU300M20DP shown with left hand ice chute and ten valves

Side view VU300M20DP

High-capacity, dual-sided ice and beverage dispensers with undercounter ice storage, dual-side beverage rail and 10 valves each side. Up to 300 lbs (136 kg) of ice storage. Standard equipment includes 4" to 6.75" (102 to 172 mm) adjustable legs for undercounter dispenser support. Dispensers are auto-fill ready to accept (2) Follett® Chewblet® ice machines with RIDE™ remote ice delivery equipment for drop-in or slide-in installations.

Dual-sided models do not include integral beverage cooling. Separate remote beverage cooling system required, provided by others.

Attractive, low-profile design

- Compact dispenser with undercounter storage extends only 25.25" (642 mm) above counter
- Allows use in island configurations
- Neutral colors blend into any decor
- Fits into ADA-compliant 34" (864 mm) counter (must be installed with 4" (102 mm) legs provided)

Faster, safer loading of ice at waist height

- Safe, easy waist-height loading from front or rear
- Eliminates overhead lifting of buckets or loading from ladders
- Allows quick reloading during serving period with minimum disruption

Added flexibility to meet varied needs

- Reliably dispenses most cubelet ice up to 1" (26 mm) square and Follett's Chewblet ice
- Choice of push-button or lever ice and beverage actuation
- Keyswitch for valves standard
- Exclusive QuickCarb™ beverage manifold – center 4 valves are pre-plumbed to both carbonated and non-carbonated water lines. Valves can be individually changed from carbonated to non-carbonated flavor with the flip of a lever.

Pre-configured for Follett RIDE model Chewblet ice machines

- Add one or two ice machines for labor savings and sanitation
- User-preferred, Chewblet nugget ice
- Slow melting, maintains drink temperature
- Accepts Chewblet ice or Micro Chewblet ice

Accessories

- Ice Manager™ diverter valve system integration kit (item# VUIMDVKIT)

JOB: _____

ITEM: _____

10%
TOTAL RECOVERED FIBER
ALL POST-CONSUMER FIBER
Paper certified by:
The Forest Stewardship Council (FSC) and the Sustainable Forestry Initiative (SFI)

VU300 Series

Vision™ dual-sided ice and beverage dispensers

Side – Ice chute

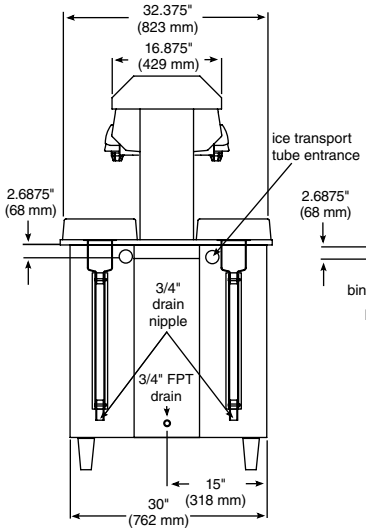

Side Opposite – Ice chute

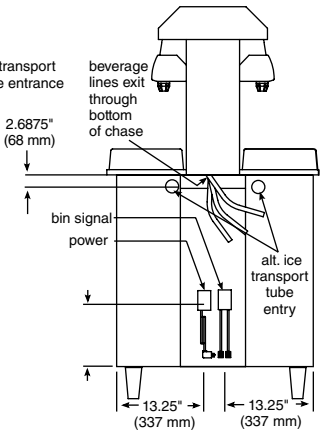

Front View – Left hand ice chute
(shown with two HCC1000AVS RIDE model Chewblet ice machines)

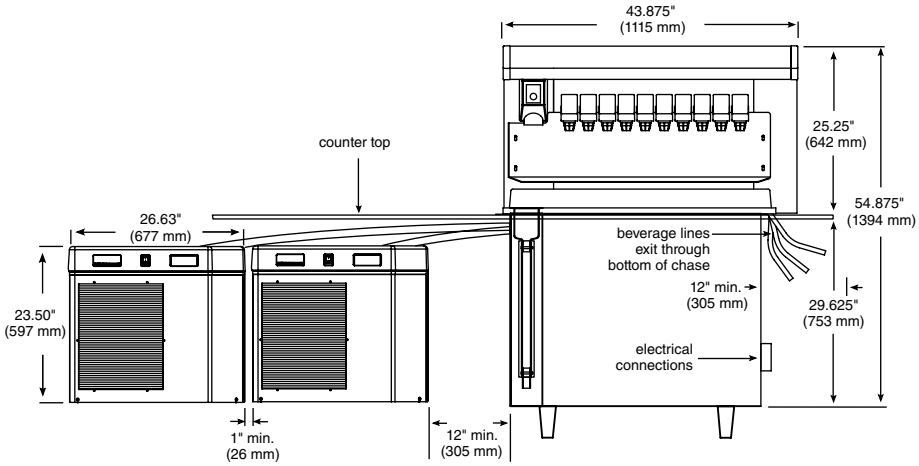

U.S. Patent 5,542,573

Top View

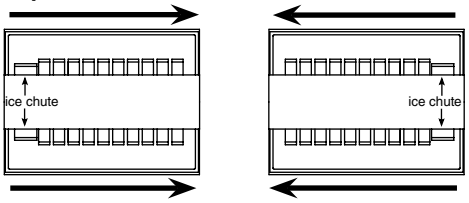

Dispenser can be installed with ice dispense tower on left or right side to allow for dispensing of ice before beverage

10 Valve Units

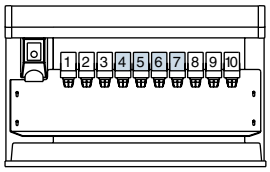

QuickCarb manifold – center (4) valves are pre-plumbed to both carbonated and non-carbonated water lines. With the simple flip of a lever, valves can be individually changed from carb to non-carb.

Refer to Design Detail Sheets for important ice machine and installation information	
Ice machine series	**Literature form#**
400 self-contained	3820
1000 self-contained	3810
1000 remote	3815
1400 self-contained	3810
1400 remote	3815
1650 remote	3815

Connections/installation

- Support all dispensers from below on channels or with supplied legs
- Three separate drain lines (do not tie drains together)
- Refer to chart above for Design Detail Sheets for important ice machine and installation information
- Ice transport tube(s) can enter on either side of dispenser

Plug Configuration

NEMA 5-15

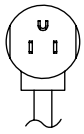

Required clearances

- 60" (1524 mm) minimum above counter for installation if dispenser will be dropped into counter
- 49" (1245 mm) minimum above counter for auger removal
- 12" (305 mm) minimum on both sides of dispenser available for connections
- 6" (153 mm) minimum between 400 series ice machines located side by side and 1" (26 mm) minimum between Horizon ice machines located side by side

Electrical 115 V, 60 Hz, 1 ph, 8 amps, max. dispenser fuse 15 amps

8 ft (2.4 m) cord and NEMA 5-15 hospital-grade plug provided with each dispenser. Separate circuits and disconnects required for each dispenser.

Approximate shipping weight 420 lbs (191 kg)

Specifications Ice and beverage dispenser to be Follett model _____. Dispenser to store up to 300 lbs (136 kg) of ice and to have double-sided beverage rail, two ice chutes and 10 Cornelius UFB1 valves on each side. Full-length drains pans to be one-piece molded polyethylene. Dispenser to allow loading ice at waist level from front or rear. Beverage rail to be of stainless steel with plastic trim. Beverage manifold to be pre-plumbed with center 4 valves individually changeable from carbonated to non-carbonated flavors without disconnecting water lines. To include 4" to 6.75" (102 to 172 mm) adjustable legs for dispenser support. Storage area to be of polyethylene, insulated with non-CFC foam polyurethane. Electric keyswitch standard. Dispenser to be pre-configured to accept up to two _____ RIDE model ice machines, sold separately. 8 ft (2.4 m) cord and NEMA 5-15 hospital grade plug provided. Dispenser to be NSF, UL and cUL listed.

Ice Manager, QuickCARB, RIDE and Vision are trademarks of Follett Corporation.
Chewblet and Follett are registered trademarks of Follett Corporation, registered in the US.
Follett reserves the right to change specifications at any time without obligation. Certifications may vary depending on country of origin.

Follett Corporation
801 Church Lane • Easton, PA 18040, USA
+1 (610) 252-7301 • Fax +1 (610) 250-0696
www.follettice.com

Follett Europe Polska Sp. z o.o.
Mokry Dwór 26C 83-021 Wiślina, Poland
+48 (58) 785-6140 • Fax +48 (58) 785-6159
www.folletteurope.com

© Follett Corporation
Form #2800
04/12