Horizon Elite™ 1010/1410 Ice Machines (Remote Condensing)

User Guide

Please visit *www.follettice.com/technicaldocuments* for the Operation and Service manual for your unit.

HCD1010R/N, HCD1410R/N, HMD1010R/N, HMD1410R/N, HCF1010R/N, HCF1410R/N, HMF1010R/N, HMF1410R/N

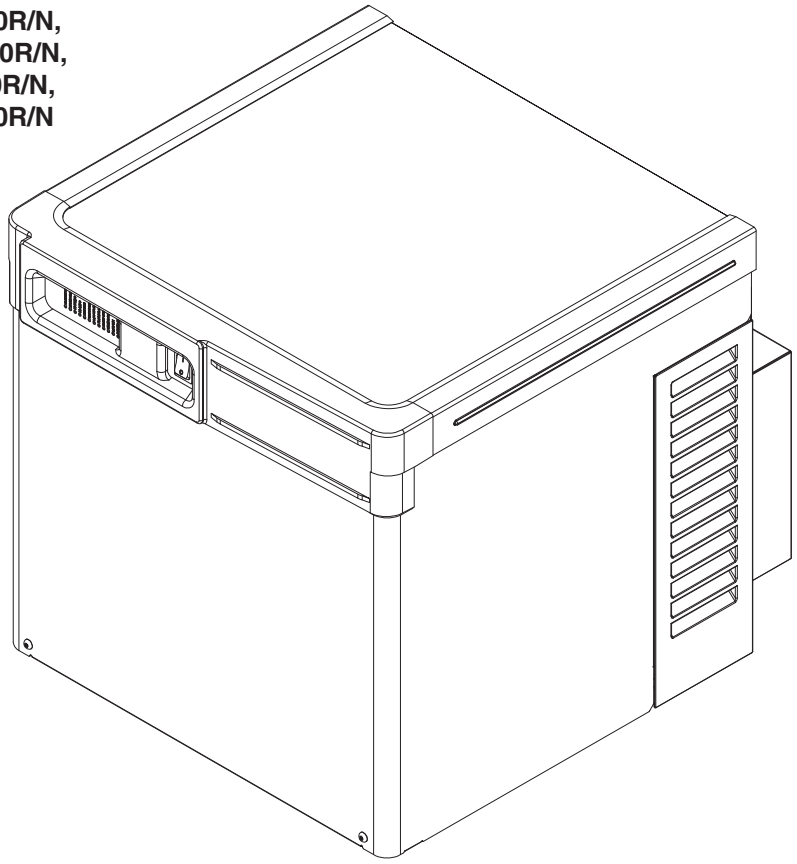

Welcome to Follett

Follett equipment enjoys a well-deserved reputation for excellent performance, long-term reliability and outstanding after-the-sale support. To ensure that this equipment delivers that same degree of service, review this guide carefully before you begin your installation.

Should you need technical help, please call our Technical Service group at (877) 612-5086 or (610) 252-7301.

Please have your model number, serial number and complete and detailed explanation of the problem when contacting Technical Service.

Getting Started

After uncrating and removing all packing material, inspect the equipment for concealed shipping damage. All freight is to be inspected upon delivery. If visible signs of damage exist, please refuse delivery or sign your delivery receipt "damaged." Follett Customer Service must be notified within 48 hours. Wherever possible, please include detailed photos of the damage with the original packaging so that we may start the freight claim process.

801 Church Lane • Easton, PA 18040, USA
Toll free (877) 612-5086 • +1 (610) 252-7301
www.follettice.com

Installation and Service Videos:
www.follettice.com/servicevideolibrary

01252592R02

⚠ CAUTION

- Warranty does not cover exterior or outside installations.
- Moving parts. Do not operate with front cover removed.
- Hot parts. Do not operate with cover removed.
- To reduce risk of shock, disconnect power before servicing.
- Drain line must not be vented.
- Water supply must have particle filtration.
- Most ice machine cleaners contain citric or phosphoric acid, which can cause skin irritation. Read caution label on product and follow instructions carefully.
- Ice is slippery. Maintain counters and floors around dispenser in a clean and ice-free condition.
- Ice is food. Follow recommended cleaning instructions to maintain cleanliness of delivered ice.

Specifications

Electrical

Separate circuit and equipment ground required.

Evaporator unit

Standard electrical: 115/60/1
Maximum fuse: 15A
Amperage: 5A

Condensing unit

	1010 Single-Phase (Tecumseh)	1010 3-Phase (Tecumseh)	1410 Single-Phase (Tecumseh)	1410 3-Phase (Tecumseh)	1410 3-Phase (Larkin)
Electrical	208-230 V, 60 Hz	208-230 V, 60 Hz	208-230 V, 60 Hz	208-230 V, 60 Hz	208-230 V, 60 Hz
Max Circuit HVACR breaker size	15A	15A	30A	25A	15A
Min Circuit Ampacity	10.7A	9.9A	19.3A	14.2A	15A

Evaporator plumbing

- 3/8" OD push-in water inlet (connection inside machine) - 3/8" OD tubing required.
- Water shut-off recommended within 10 feet (3 m).
- Follett recommends installation of Follett water filter system (part# 00130286) in ice machine inlet water line.

Flush drain plumbing

- 3/4" MPT flush drain connection at the rear of the machine.
- Drain must slope 1/4" inch per foot (6 mm per 30.4 cm).
- Drain line should not be shared with any other piece of equipment.
- Drain line cannot be reduced to a size smaller than 1 inch.
- Drain should be piped without a vent.

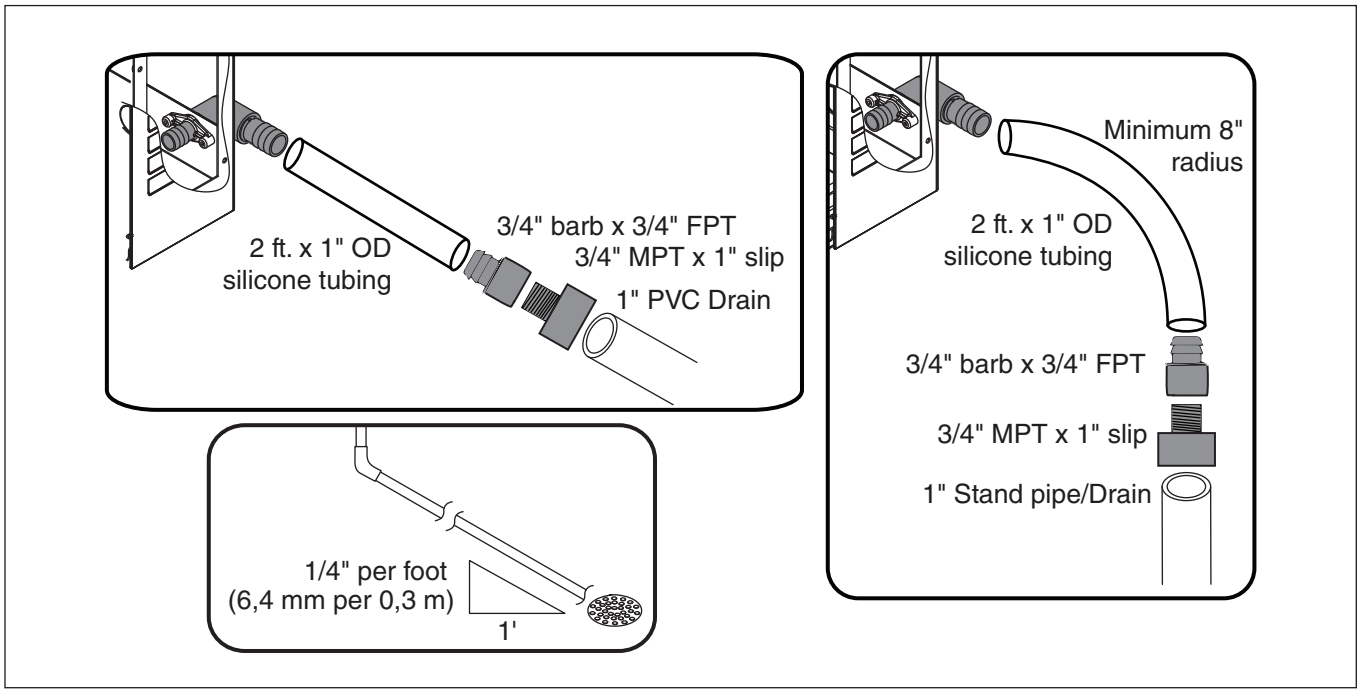

Chassis drain plumbing

- Plug must be removed from John Guest fitting.
- Route 3/8" drain tubing through knockout in back of docking station and insert fully into John Guest fitting connection at the rear of the machine chassis. Route other end of 3/8" drain tubing to drain.
- Drain must slope 1/4" inch per foot (6 mm per 30.4 cm).

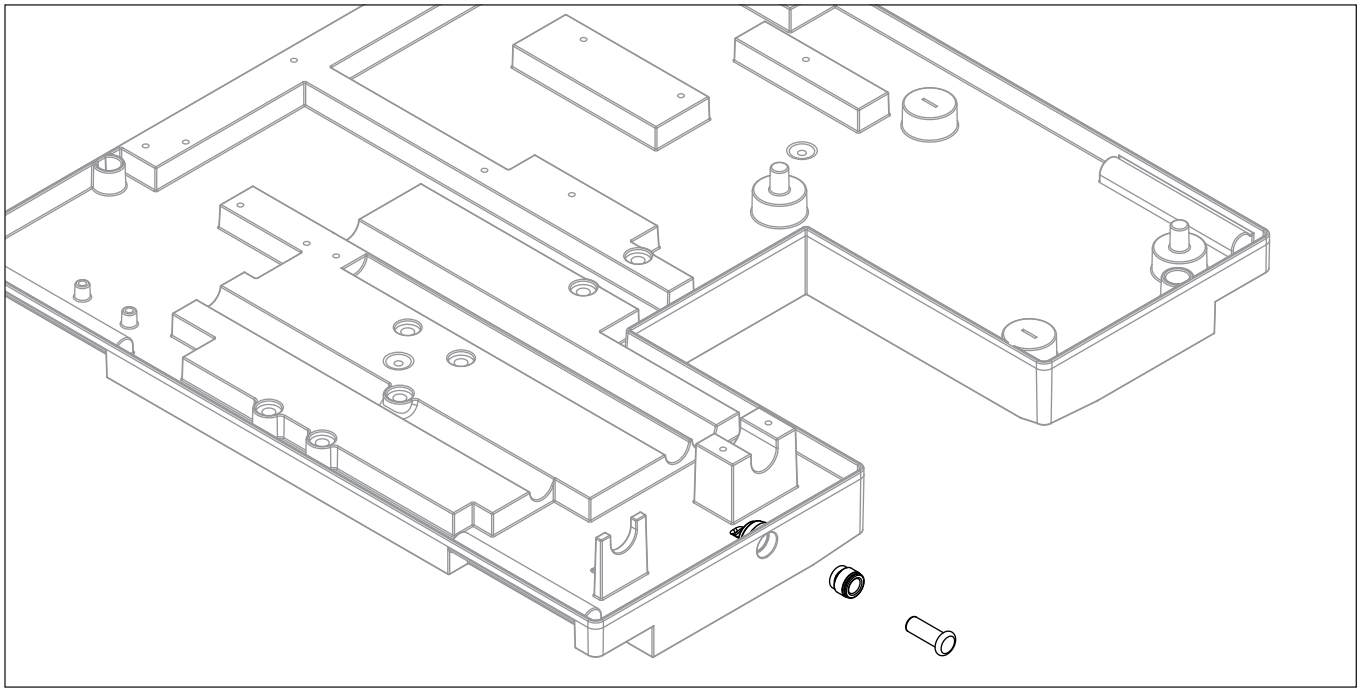

Ambient

Evaporator unit

Air temperature	100 F/38 C max.	50 F/10 C min.
Water temperature	90 F/32 C max.	45 F/7 C min.
Water pressure	70 psi max. (483 kPa)	10 psi min. (69 kPa)

Condenser unit

Air temperature 120 F/49 C max. –20F/–29C min.

Refrigeration

- 3/8" liquid line
- 5/8" suction line

Note: Rack system installations require a capacity of 10,000 BTU/hr for 1010 machines and 13,000 BTU/hr for 1410 machines at 0 F (–18 C) evaporator temperature. Evaporator pressure regulator (not supplied) is required.

Weight

Evaporator unit: 125 lbs (57 kg)

Condensing unit:

	Horizon Elite 1010 series	Horizon Elite 1410 series
Approximate ship weight	260 lb (118 kg)	270 lb (122 kg) – single phase (Tecumseh) 230 lb (104 kg) – three phase (Larkin)
Approximate net weight	250 lb (114 kg)	260 lb (118 kg) – single phase (Tecumseh) 210 lb (95 kg) – three phase (Larkin)

Ice production

1010 ice machine capacity/24 hrs.

Ambient Air Temperature F/C							
Evap Potable Water Temperature F/C	F	60	70	80	90	100	
	C	16	21	27	32	38	
	50	1051	978	906	834	763	lbs
	10	477	444	411	379	346	kg
	60	994	925	855	796	737	lbs
	16	451	420	388	361	335	kg
	70	937	871	805	758	711	lbs
	21	425	395	365	344	323	kg
	80	904	839	774	727	680	lbs
	27	410	381	351	330	309	kg
	90	872	807	743	696	648	lbs
	32	396	366	337	316	294	kg

1410 ice machine capacity/24 hrs.

Ambient Air Temperature F/C							
Evap Potable Water Temperature F/C	F	60	70	80	90	100	
	C	16	21	27	32	38	
	50	1474	1372	1269	1212	1154	lbs
	10	669	623	576	550	524	kg
	60	1385	1292	1198	1148	1097	lbs
	16	628	586	544	521	498	kg
	70	1296	1212	1127	1083	1039	lbs
	21	588	550	511	492	472	kg
	80	1239	1155	1072	1030	988	lbs
	27	562	524	487	468	449	kg
	90	90	1181	1099	1017	976	lbs
	32	32	536	499	462	425	kg

Dimensions and clearances

- Entire front of ice machine must be clear of obstructions/connections to allow removal.
- 1" (26 mm) clearance above ice machine for service.
- 1" (26 mm) minimum clearance on sides.
- The intake and exhaust air grilles must provide at least 250 sq in (1615 sq cm) of open area.
- Air-cooled ice machines – 18" (458 mm) minimum clearance between discharge and air intake-grilles.

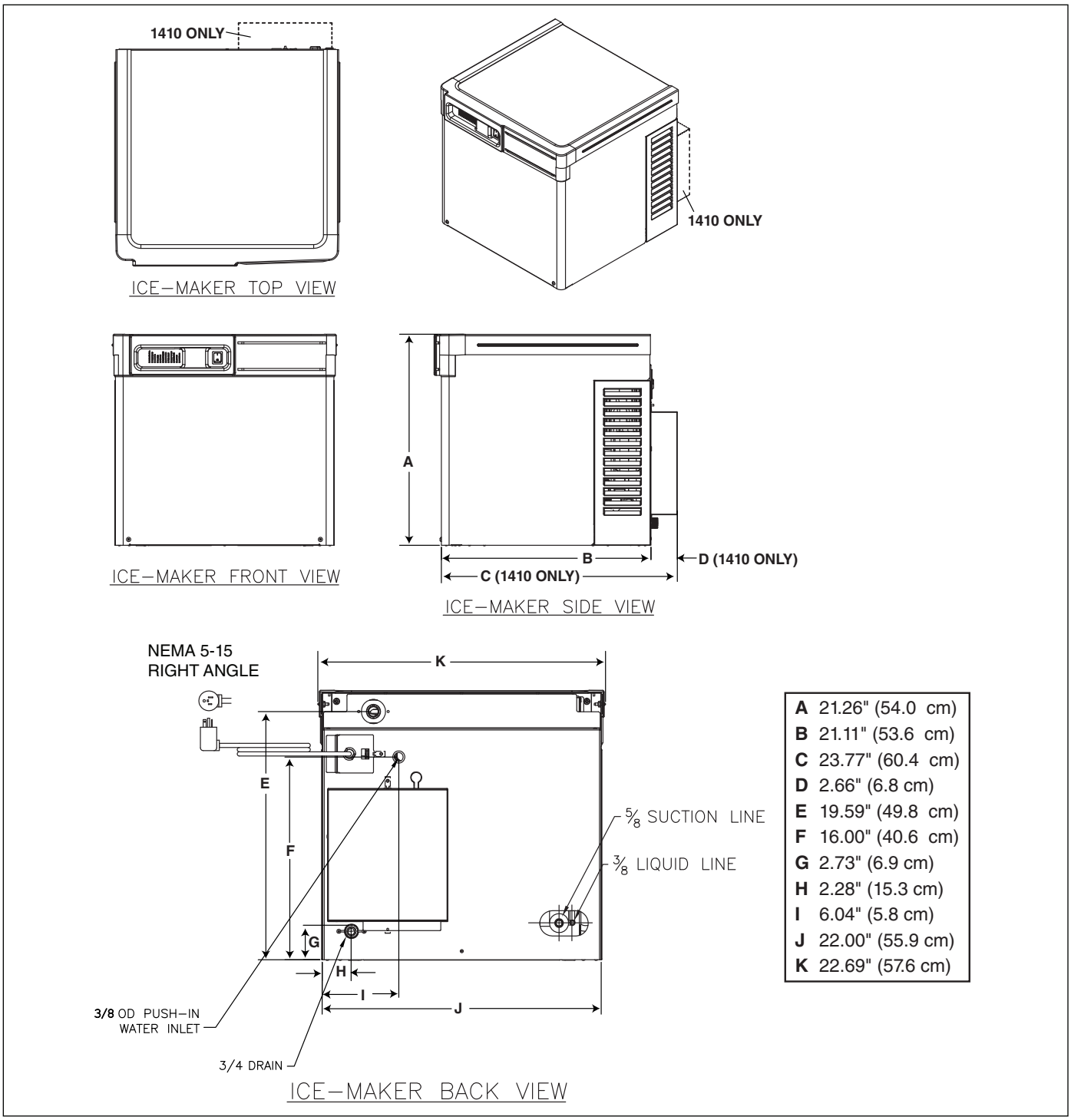

A	21.26" (54.0 cm)
B	21.11" (53.6 cm)
C	23.77" (60.4 cm)
D	2.66" (6.8 cm)
E	19.59" (49.8 cm)
F	16.00" (40.6 cm)
G	2.73" (6.9 cm)
H	2.28" (15.3 cm)
I	6.04" (5.8 cm)
J	22.00" (55.9 cm)
K	22.69" (57.6 cm)

Condensing unit

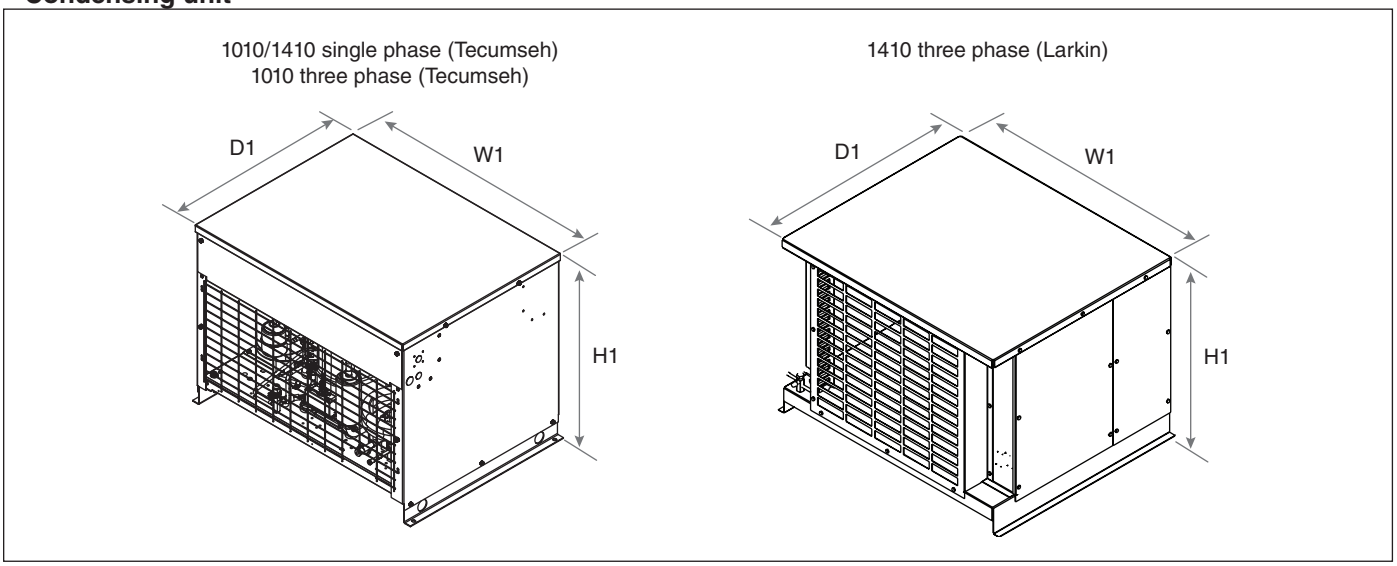

	Horizon Elite 1010 series	Horizon Elite 1410 series
W1 Width	36.25" (91.4 cm) – all models	36.25" (90.1 cm) – single phase (Tecumseh) 37.75" (95.9 cm) – three phase (Larkin)
D1 Depth	25.50" (64.8 cm) – all models	25.50" (64.8 cm) – single phase (Tecumseh) 28.25" (71.6 cm) – three phase (Larkin)
H1 Height	26.10" (66.3 cm) – all models	26.10" (66.3 cm) – single phase 19.75" (50.2 cm) – three phase (Larkin)
Electrical	single phase – 208-230/60/1 three phase – 208-230/60/3	single phase – 208-230/60/1 (Tecumseh) three phase – 208-230/60/3 (Larkin)
Operating power	single phase – 2.4 kW three phase – 2.2 kW	single phase – 4.2 kW (Tecumseh) three phase – 3.0 kW (Larkin)
Minimum circuit ampacity	single phase – 10.7 A three phase – 9.9 A	single phase – 19.3 A (Tecumseh) three phase – 15 A (Larkin)
Maximum overcurrent protection	single phase – 15 A three phase – 15 A	single phase – 30 A (Tecumseh) three phase – 15 A (Larkin)
Outdoor condensing unit operating limits (air temperature)	min -20 F (-29 C) max 120 F (49 C)	min -20 F (-29 C) max 120 F (49 C)
Maximum refrigerant line run length	100' (30.5 m)	100' (30.5 m)
Maximum line rise above evaporator	35' (10.7 m)	35' (10.7 m)
Evaporator mounting above condenser	15' (4.6 m)	15' (4.6 m)
Maximum refrigeration line drop without oil trap	15' (4.6 m)	15' (4.6 m)
Refrigerant charge	12.5 lb required at installation	12.5 lb – single phase (Tecumseh) 8.5 lb – three phase (Larkin) required at installation
Approximate ship weight	260 lb (118 kg)	270 lb (122 kg) – single phase (Tecumseh) 230 lb (104 kg) – three phase (Larkin)
Approximate net weight	250 lb (114 kg)	260 lb (118 kg) – single phase (Tecumseh) 210 lb (95 kg) – three phase (Larkin)

NOTE:
1. The entire liquid line should be insulated separately from the suction line.

Operation

Cleaning/sanitizing and preventive maintenance (all models)

Note: Do not use bleach to sanitize or clean the icemaker.

Preventive maintenance

Periodic cleaning of Follett's icemaker system is required to ensure peak performance and delivery of clean, sanitary ice. The recommended cleaning procedures that follow should be performed at least as frequently as recommended, and more often if environmental conditions dictate.

Cleaning of the condenser can usually be performed by facility personnel. Cleaning of the icemaker system, in most cases, should be performed by your facility's maintenance staff or a Follett authorized service agent. Regardless of who performs the cleaning, it is the operator's responsibility to see that this cleaning is performed according to the schedule below. Service problems resulting from lack of preventive maintenance will not be covered under the Follett warranty.

Weekly exterior care

The exterior may be cleaned with a stainless cleaner such as 3M Stainless Steel Cleaner & Polish or equivalent.

Monthly condenser cleaning (air-cooled icemaker only)

1. Use a vacuum cleaner or stiff brush to carefully clean condenser coils of air-cooled icemakers to ensure optimal performance.
2. When reinstalling counter panels in front of remote icemakers, be sure that ventilation louvers line up with condenser air duct.

Semi-annual evaporator cleaning (every 6 months)

⚠ WARNING

- Wear rubber gloves and safety goggles (and/or face shield) when handling ice machine cleaner or sanitizer.

⚠ CAUTION

- Use only Follett approved SafeCLEAN Plus™ cleaning solution.
- DO NOT USE BLEACH.
- It is a violation of federal law to use these solutions in a manner inconsistent with their labeling.
- Read and understand all labels printed on packaging before use.

Note: Complete procedure for cleaning an sanitizing MUST be followed. Ice must be collected for 10 minutes before putting ice machine back into service.

1. Press the CLEAN button. The machine will drain. The auger will run for a short time and then stop. Wait for the LOW WATER light to come on.

Fig. 1

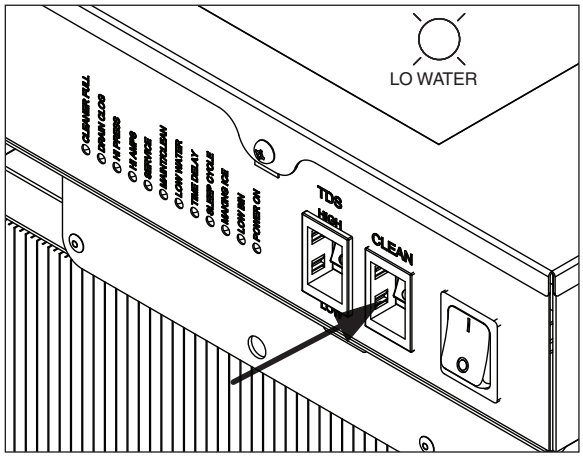

2. Follow the directions on the SafeCLEAN Plus packaging to mix 1 gal. (3.8 L) of Follett SafeCLEAN Plus solution. Use 100 F (38 C) water.
3. Using a 1 quart (1L) container, slowly fill cleaning cup until CLEANER FULL light comes on. Do not overfill.
4. Place one SaniSponge™ cleaning sponge in remaining sanitizing and cleaning solution and retain for Step 9.

Note: Do not use bleach to sanitize or clean the icemaker.

Fig. 2

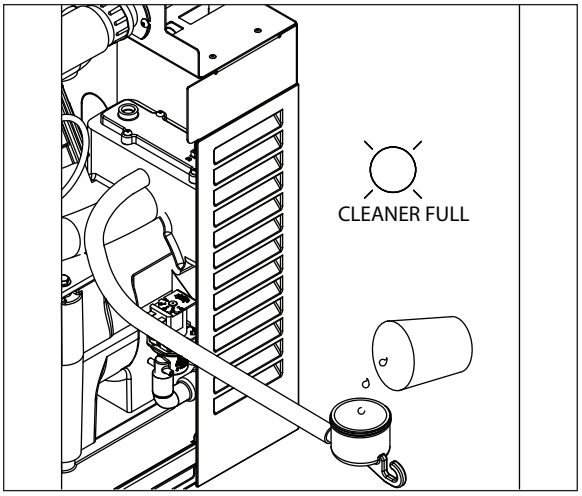

5. Replace cover on cleaner cup. Machine will clean, then flush 3 times in approximately 15 minutes. Wait until machine restarts.

Fig. 3

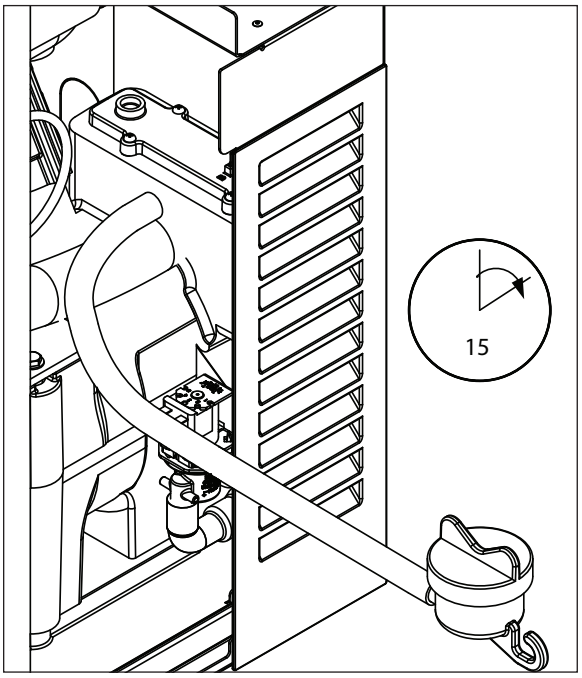

6. To clean/sanitize ice transport tube – Press power switch OFF

Fig. 4

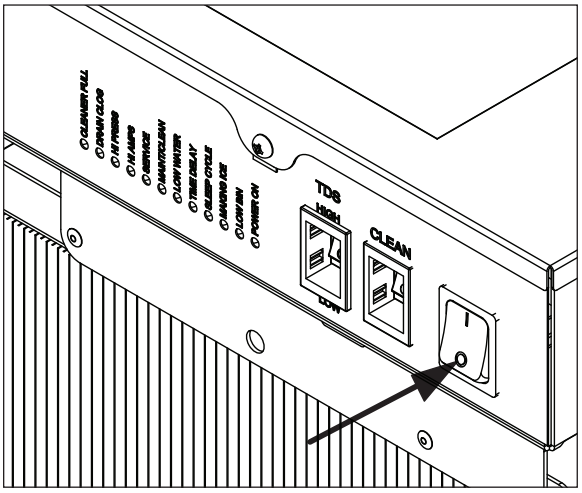

7. Disconnect coupling as shown.

Fig. 5

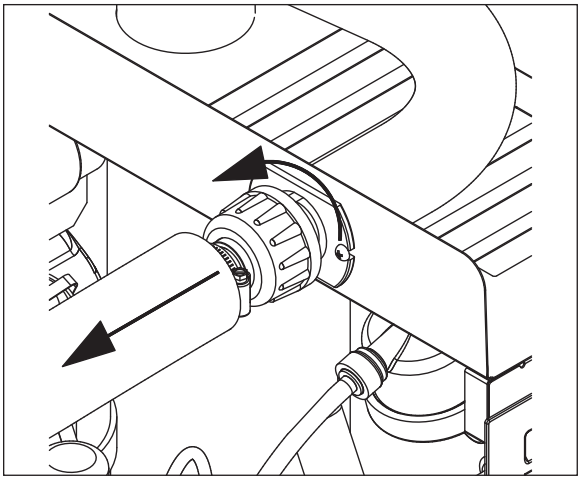

8. Using disposable foodservice grade gloves, insert dry SaniSponge cleaning sponge.
9. Insert SaniSponge cleaning sponge soaked in SafeClean Plus (from Step 4).
10. Push both SaniSponge cleaning sponges down ice transport tube with supplied pusher tube.

Fig. 6

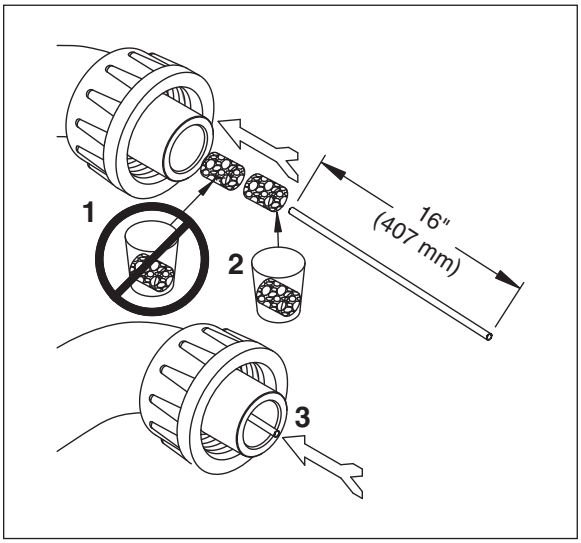

11. Remove and discard 16 inch (407 mm) pusher tube.

Fig. 7

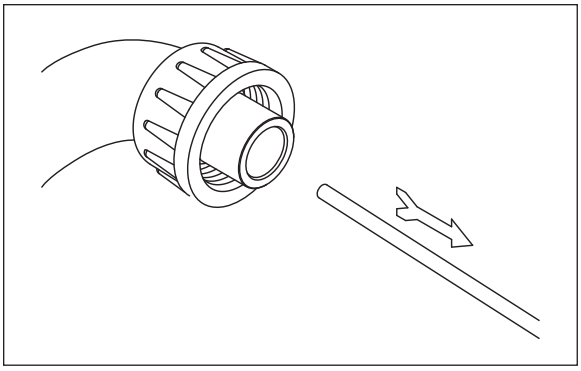

12. Reconnect coupling. Press power switch ON. Ice pushes SaniSponge cleaning sponges through ice transport tube.

Fig. 8

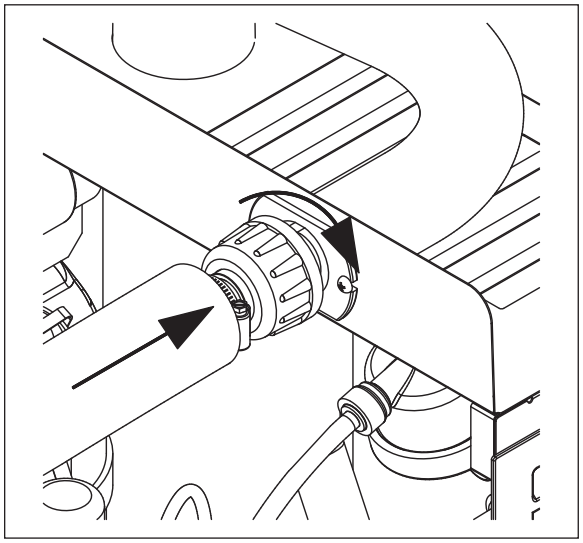

13. Place a sanitary (2 gal. or larger) container in bin or dispenser to collect SaniSponge cleaning sponges and ice for 10 minutes.

14. Collect 5.5 lbs (3 kg) of ice from unit. Discard ice and SaniSponge cleaning sponges.

Fig. 9

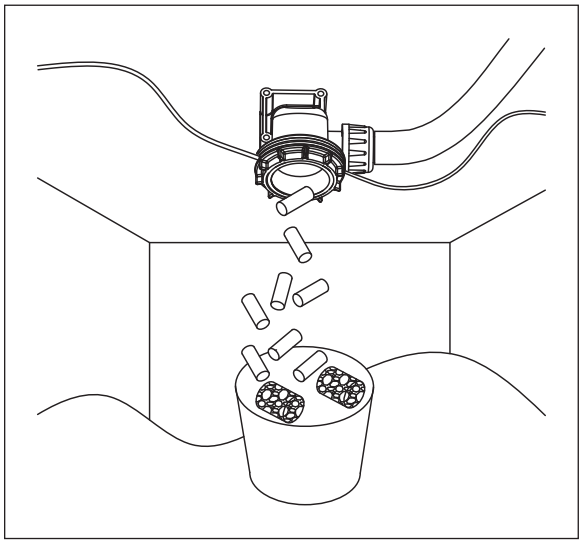

Wiring diagram, evaporator unit

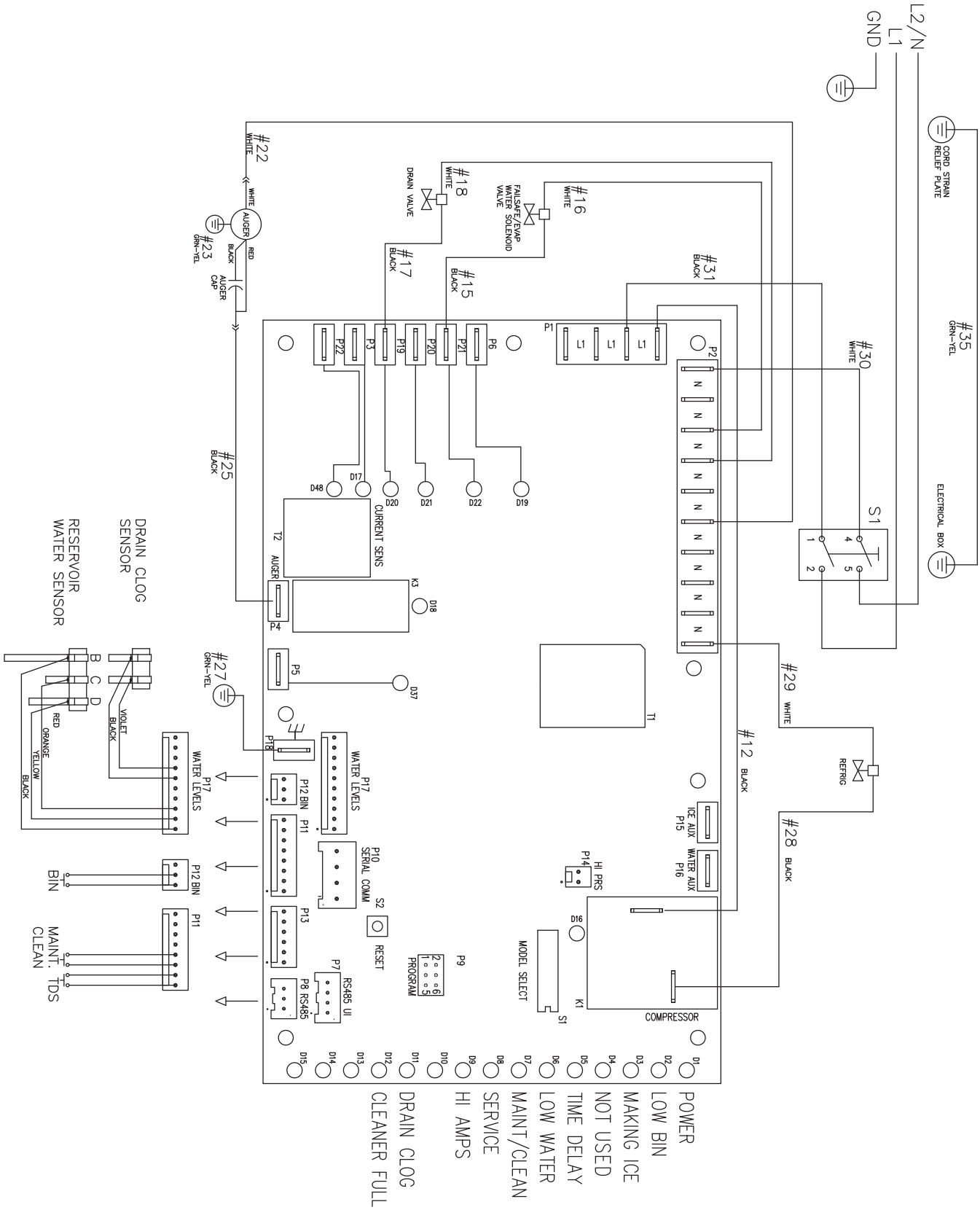

Gearmotor data	**Resistance of windings**
Gearmotor current 2.8A @ 115 V	**115 vac gearmotor (Bison):**
Gearmotor torque-out (high amp) trip point: 5.6A	White to Black: 3Ω
	White to Red: –3Ω
	Red to Black: 6Ω

Single-phase condensing unit wiring diagram (Tecumseh)

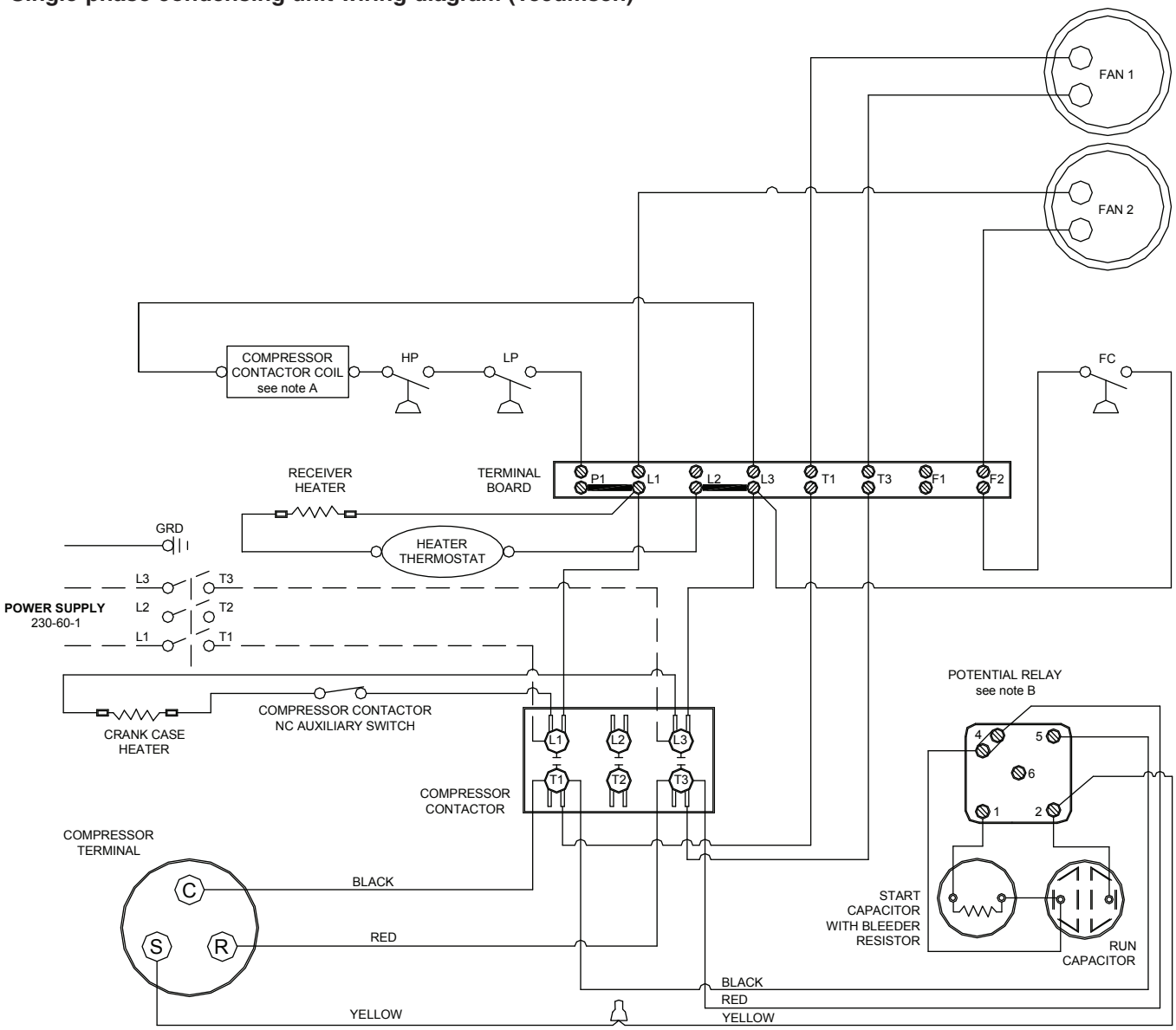

3-phase condensing unit wiring diagram (Tecumseh)

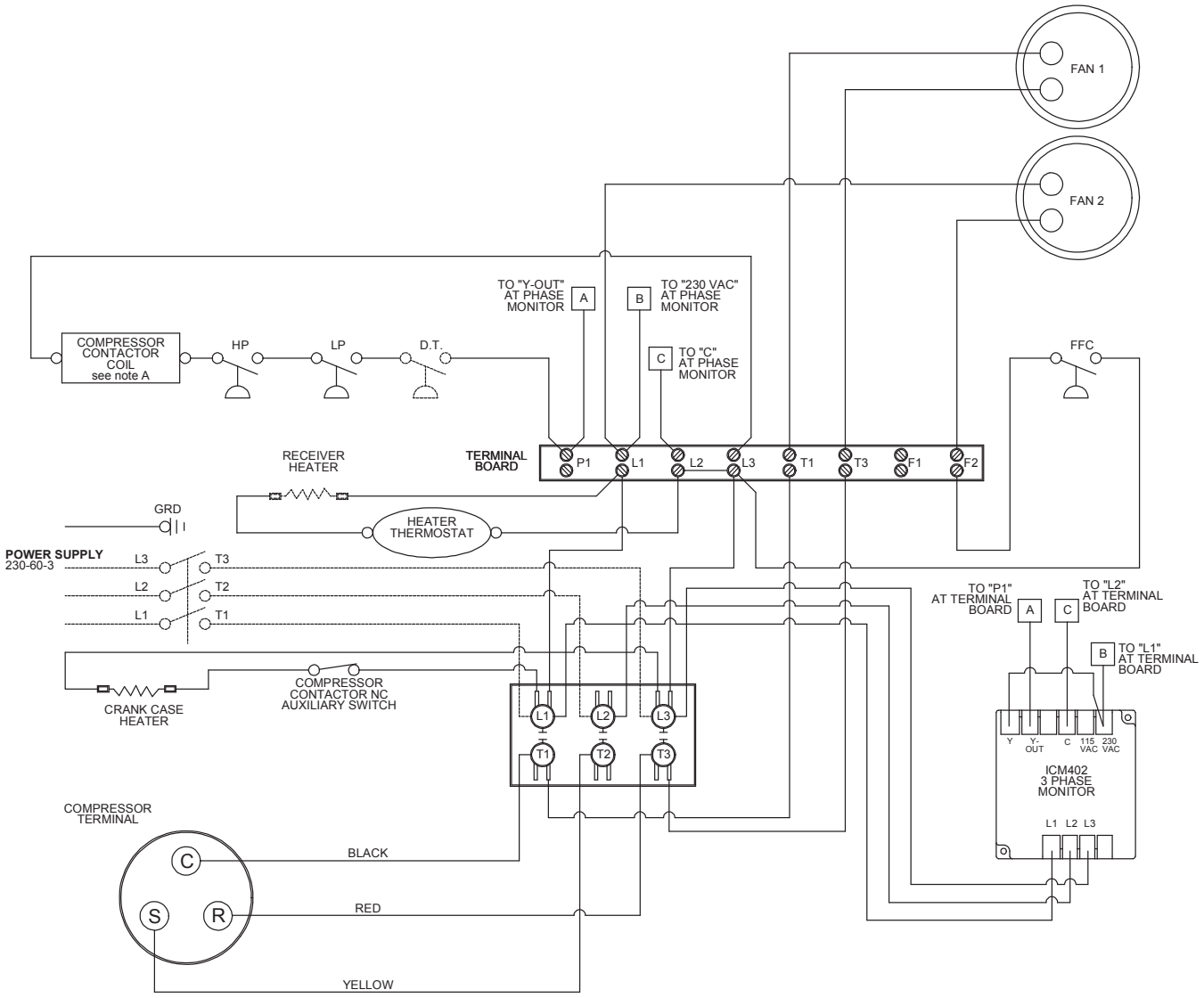

3-phase condensing unit wiring diagram (Larkin)

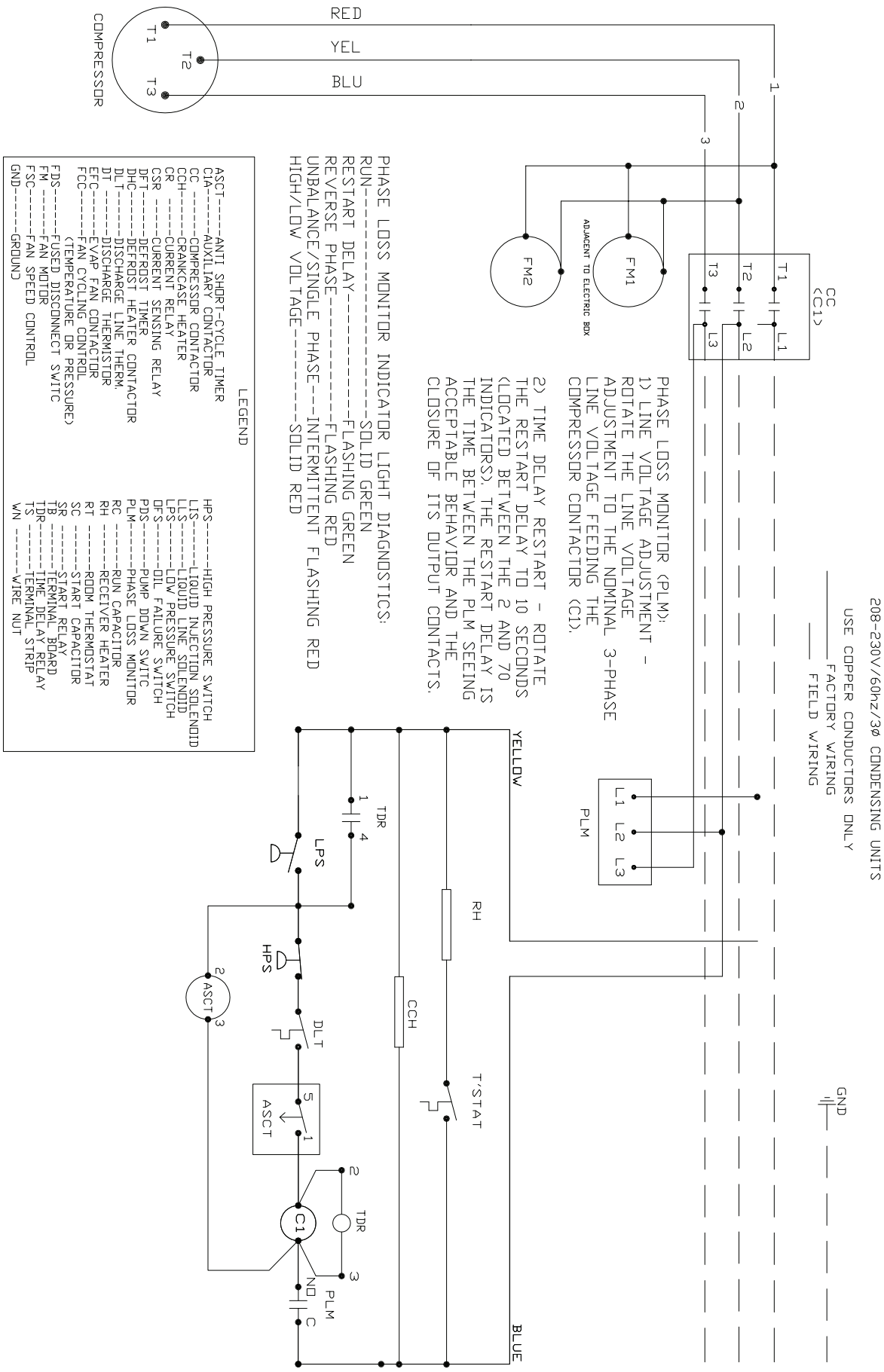

Refrigeration system

1010 - Refrigerant pressure data

Air-cooled condensers (air)	60 F/16 C	70 F/21 C	80 F/27 C	90 F/32 C	100 F/38 C
Pressure (psig) discharge/suction	202/33	229/35	255/37	275/38	295/39

1410 - Refrigerant pressure data

Air-cooled condensers (air)	60 F/16 C	70 F/21 C	80 F/27 C	90 F/32 C	100 F/38 C
Pressure (psig) discharge/suction	198/31	233/32	268/34	287/36	305/37

Refrigeration system diagram

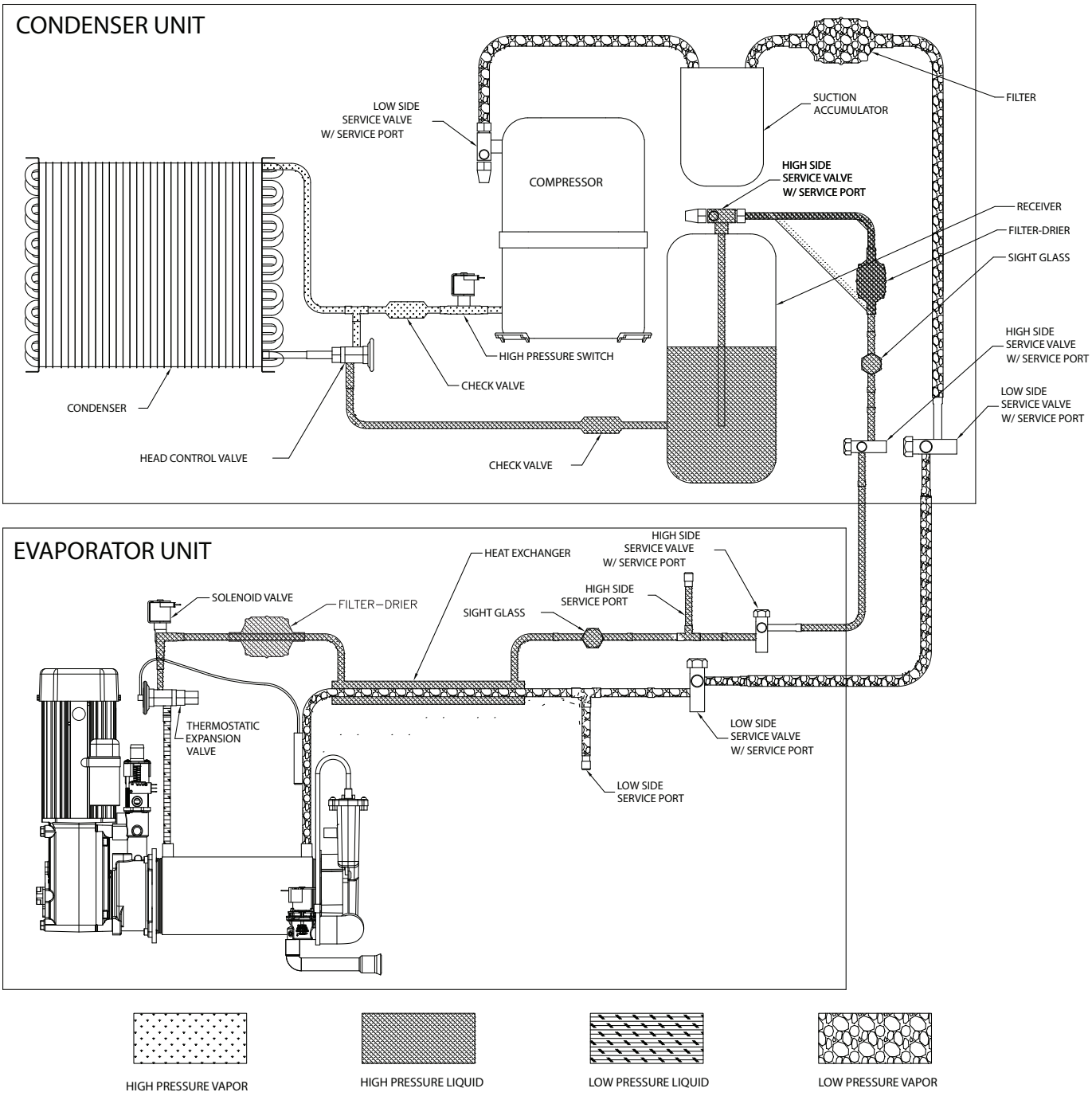

Refrigeration charge

All service on refrigeration systems must be performed in accordance with all federal, state and local laws. It is the responsibility of the technician to ensure that these requirements are met. Recharging ice machine to other than factory specifications will void the warranty.

R404A ice machine charge specifications

Model	Line Run	Total Charge
1010/1410 single-phase (Tecumseh)	0-100 ft (0-30.5 m)	12.5 lbs (5.44 kg)
1010 three-phase (Tecumseh)	0-100 ft (0-30.5 m)	12.5 lbs (5.44 kg)
1410 three-phase (Larkin)	0-100 ft (0-30.5 m)	8.5 lbs (3.86 kg)

Note: Condensing unit shipped with 0.5 lb of R404A charge.

Refrigerant replacement requirements

1. Non-contaminated refrigerant removed from any Follett refrigeration system can be recycled and returned to the same system after completing repairs. Recycled refrigerant must be stored in a clean, approved storage container. If additional refrigerant is required, virgin or reclaimed refrigerant that meets ARI standard 700-88 must be used.
2. In the event of system contamination (for example, a compressor burn out, refrigerant leak, presence of non-condensibles or moisture), the system must be repaired, evacuated and recharged using virgin or reclaimed refrigerant that meets ARI standard 700-88.
3. Follett LLC does not approve of recovered refrigerants. Improper refrigeration servicing procedures will void the factory warranty.

Evacuation

Evacuate the system to a level of 500 microns. When the 500 micron level is reached, close all valves. Allow the system to sit for approximately 20 minutes. During this period the system pressure should not rise. If the system pressure rises and stabilizes there is moisture in the system and further evacuation is needed. If the pressure continues to rise check the system for leaks.

Evaporator Unit Low-side or ice making head

Ambients	Minimum	Maximum
Air temperature	50 F/10 C	100 F/37.8 C
Water temperature[1]	45 F/7 C	90 F/32.2 C

[1]Ambient water temperature is measured in the ice machine water reservoir.

Ice capacity test

Ice machine production capacity can only be determined by weighing ice produced in a specific time period.

1. Replace all panels on ice machine.
2. Disconnect the drain solenoid.
3. Run ice machine for at least 15 minutes.
4. Weigh and record weight of container used to catch ice.
5. Catch ice for 15 or 20 minutes.
6. Reconnect the drain solenoid.
7. Weigh harvested ice and record total weight.
8. Subtract weight of container from total weight.
9. Convert fractions of pounds to decimal equivalents (ex. 6 lbs 8oz = 6.5 lbs).
10. Calculate production using following formula:

$$\frac{\text{1440 min. x wt. of ice produced}}{\text{Total test time in minutes}} = \text{Production capacity/24 hr.}$$

11. Calculated amount per 24 hours should be checked against rated capacity for same ambient and water temperatures in Ice Production Tables.

Troubleshooting

Please see “Service” section for a description of each function.

Ice machine disposition	Possible causes	Corrective action
Legend: ● ON ○ OFF ◐ ON or OFF ⊗ FLASHING		
1. Ice machine is in running condition but not making ice. CLEANER FULL ○ DRAIN CLOG ○ HI PRESS ○ HI AMPS ○ SERVICE ○ MAINT/CLEAN ○ LOW WATER ○ TIME DELAY ○ NOT USED ○ MAKING ICE ● LOW BIN ● POWER ON ⊗ .	1. No output from PC board. 2. Defective start relay. 3. Defective start capacitor. 4. Defective run capacitor. 5. Defective main contactor. 6. Defective compressor.	1. Replace PC board. 2. Replace start relay. 3. Replace start capacitor. 4. Replace run capacitor. 5. Replace main contactor. 6. Replace compressor.
2. Machine in TIME DELAY without full bin. CLEANER FULL ○ DRAIN CLOG ○ HI PRESS ○ HI AMPS ○ SERVICE ○ MAINT/CLEAN ○ LOW WATER ○ TIME DELAY ◐ NOT USED ○ MAKING ICE ○ LOW BIN ◐ POWER ON ⊗	1. Ice jamming due to improperly installed transport tube causing a false shuttle. 2. Shuttle stuck in up position. 3. Damaged or improperly installed thermostat (open). 4. Transport tube backed-out of coupling.	1. Correct transport tube routing. 2. Repair or replace shuttle mechanism. 3. Replace or reposition thermostat. 4. Correct coupling installation.
3. Ice machine is not making ice. HI AMPS. CLEANER FULL ○ DRAIN CLOG ○ HI PRESS ○ HI AMPS ● SERVICE ○ MAINT/CLEAN ○ LOW WATER ○ TIME DELAY ● NOT USED ○ MAKING ICE ○ LOW BIN ◐ POWER ON ⊗	1. Poor water quality causing ice to jam auger. 2. Damaged shuttle mechanism. 3. Intermittent drive output from PC board. Evaporator will freeze causing a HI AMPS error. 4. Gearmotor is unplugged.	1. Clean ice machine. Increase flushing frequency. Position TDS switch to High TDS setting. 2. Replace or repair shuttle mechanism. 3. Replace PC board. 4. Plug in gearmotor.
4. Ice machine is not making ice. Drain clog. CLEANER FULL ○ DRAIN CLOG ● HI PRESS ○ HI AMPS ○ SERVICE ○ MAINT/CLEAN ○ LOW WATER ○ TIME DELAY ○ NOT USED ○ MAKING ICE ○ LOW BIN ◐ POWER ON ⊗	1. Internal water leak touching chassis sensor.	1. Identify and repair leak. Clean/dry chassis and sensors and restart machine.
5. Ice machine is making ice. Drain clog. CLEANER FULL ○ DRAIN CLOG ● HI PRESS ○ HI AMPS ○ SERVICE ○ MAINT/CLEAN ○ LOW WATER ○ TIME DELAY ○ NOT USED ○ MAKING ICE ○ LOW BIN ○ POWER ON ⊗	1. Improper flow in drain system.	1. Correct/clean drain system.

Ice machine disposition	Possible causes	Corrective action
Legend: ● ON ○ OFF ◐ ON or OFF ⊗ FLASHING		
6. Ice machine is making ice. Excessive water in bin or coming into bin from transport tube. CLEANER FULL ○ DRAIN CLOG ○ HI PRESS ○ HI AMPS ○ SERVICE ○ MAINT/CLEAN ○ LOW WATER ○ TIME DELAY ○ NOT USED ○ MAKING ICE ● LOW BIN ● POWER ON ⊗	1. Failed water sensors. Processor assumes there is no water when there is water. 2. Blocked reservoir vent. 3. Defective water feed solenoid valve. Stuck in open position.	1. Clean or replace water probe assembly. Check wiring connections. 2. Clean or replace vent tubes. 3. Replace water feed solenoid valve.
7. Ice machine is not making ice. Lo water. CLEANER FULL ○ DRAIN CLOG ○ HI PRESS ○ HI AMPS ○ SERVICE ○ MAINT/CLEAN ○ LOW WATER ● TIME DELAY ◐ NOT USED ○ MAKING ICE ○ LOW BIN ● POWER ON ⊗	1. Water supply is insufficient. 2. Low water pressure. 3. Defective water feed solenoid valve. Stuck in closed position. 4. No water feed output from PC board. 5. Plugged screen on inlet side of fill solenoid. 6. Plugged check valve.	1. Restore water supply and check water filters. If evaporator was completely empty the reset button may have to be pressed to restart the ice machine. 2. Ice machine will eventually start when water reaches normal lo level. 3. Replace water feed solenoid valve. 4. Replace PC board. 5. Remove and clean screen. 6. Remove and clean.

ATTENTION!

To prevent circuit breaker overload, wait 5 minutes before restarting this unit. This allows the compressor to equalize and the evaporator to thaw.

Warranty Registration and Equipment Evaluation

Thank you for purchasing Follett equipment. Our goal is to earn your complete satisfaction by delivering high-value products and services backed by outstanding customer and technical support.

Please review the installation instructions thoroughly. It is important that the installation be performed to factory specifications so your equipment operates at its maximum efficiency.

Follett LLC will not be liable for any consequential damages, expenses, connecting or disconnecting charges, or any losses resulting from a defect of the machine. For full warranty details, visit our website www.follettice.com/productwarranties.

Registering your equipments helps Follett track your equipment's service history should you need to contact us for technical support, and your feedback helps us improve our products and services. Please visit www.follettice.com/support to complete the Warranty Registration form.

Should you have any questions, please contact Follett's technical support group at (877) 612-5086 or (610) 252-7301 and we will be happy to assist you.

Harmony, Ice Manager, Micro Chewblet, SafeCLEAN Plus, SaniSponge and Vision are trademarks of Follett LLC.
Chewblet, RIDE and Follett are registered trademarks of Follett LLC, registered in the US.

Innovative solutions, inspired by ice

801 Church Lane • Easton, PA 18040, USA
Toll free (877) 612-5086 • +1 (610) 252-7301
www.follettice.com

01252592R02
© Follett LLC 2/20