Symphony™

110 Series – 220 V 60 Hz/230 V 50 Hz Ice and Water Dispensers

Order parts online
www.follettice.com

Installation, Operation and Service Manual

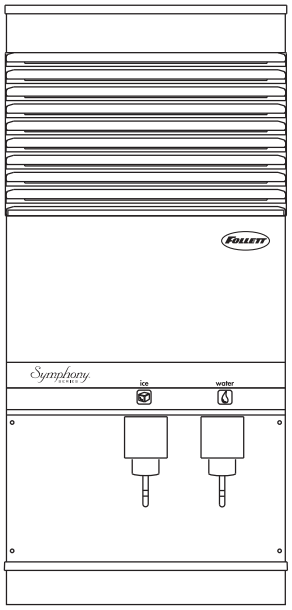

C/E110CT400A/W

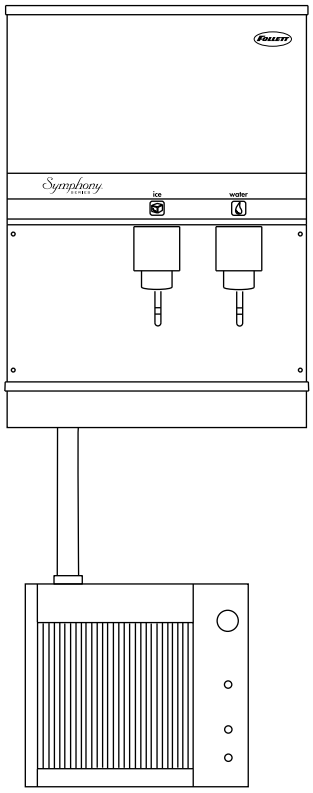

C/E110CR400A/W

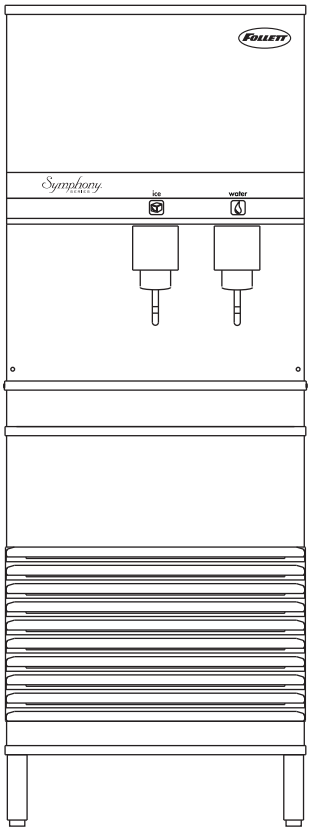

C/E110FB400A/W

Following installation, please forward this manual to the appropriate operations person.

FOLLETT®
Innovative solutions, inspired by ice

801 Church Lane • Easton, PA 18044, USA
Toll free (877) 612-5086 • +1 (610) 252-7301
www.follettice.com

00109520R06

Table of contents

Before you begin 3
Specifications 4
Field wiring 5
Installation 6
Installing freestanding dispensers 6
Installing countertop dispensers 8
Installing RIDE™ ice machines 10
Installing top mount ice machines 10
User information 12
Cleaning and sanitizing procedures 12
Service Information 15
Wiring diagram – lever models 15
Wiring diagram – SensorSAFE™ models 16
Dispenser troubleshooting 17
Troubleshooting SensorSAFE board and sensors 18
Disassembly and replacement instructions 19
Thermostat locations 22
Parts 23
Dispenser exterior 23
Dispense chute and splash panel areas – lever models 24
Electrical box – lever models 25
Dispense chute and splash panel areas – SensorSAFE models 26
Electrical box – SensorSAFE models 27
Wheel motor and drive system 28
Hopper components 28
Chilled water components 30
Solenoid dispense assembly 31

Welcome to Follett

Follett equipment enjoys a well-deserved reputation for excellent performance, long-term reliability and outstanding after-the-sale support. To ensure that this equipment delivers that same degree of service, we ask that you review the installation portion of this manual before beginning to install the unit. Our installation instructions are designed to help you achieve a trouble-free installation. Should you have any questions or require technical help at any time, please call our technical service group at (610) 252-7301.

Note: To expedite assistance, all correspondence or communication MUST include the model number, serial number and complete and detailed explanation of the problem

Before you begin

After uncrating and removing all packing material, inspect the equipment for concealed shipping damage. If damage is found, notify your shipper immediately and contact Follett Corporation for help in filing a claim, if necessary.

Check your paperwork to determine which model you have. Follett model numbers are designed to provide information about the type and capacity of Follett equipment. Following is an explanation of model numbers:

C110CR400A

- Condenser type – A = air-cooled, W = water-cooled
- Ice machine capacity and refrigerant – 400 = 400 lbs (181kg)/day, R404A refrigerant
- Ice machine location – R = RIDE ice machine, T = integral ice machine in top of cabinet, B = ice machine in base of freestanding units
- Dispenser configuration – C = countertop, F = freestanding
- Approximate storage capacity in lbs
- Alternate voltage – C = 220 V 60 Hz, E = 230 V 50 Hz

⚠ Important cautions

- **Do not tilt any unit further than 30° off vertical during uncrating or installation.**
- **Dispenser bin area contains mechanical, moving parts. Keep hands and arms clear of this area at all times. If access to this area is required, power to unit must be disconnected first.**
- **Follett recommends a Follett water filter system be installed in the ice machine inlet water line (standard capacity #00130299, high capacity #00978957, carbonless high capacity #01050442).**
- **Ice is slippery. Be sure counters and floors around dispenser are clean, dry and free of ice.**
- **Ice is food. Follow recommended cleaning instructions to maintain cleanliness of delivered ice.**

Specifications

Electrical

1. Models with RIDE® ice machines (C/E110CR400A/W)
   Ice machine and dispenser require their own separate, dedicated circuit.

	Ice machine	Dispenser
220 V/60 Hz/1 phase	5A	1.5A
230 V/50 Hz/1 phase	5A	1.5A

2. Freestanding models and models with integral ice machines (C/E110FB400A/W, C/E110CT400A/W)
   Require a dedicated circuit.

	Total system
220 V/60 Hz/1 phase	6.5A
230 V/50 Hz/1 phase	6.5A

3. Dispensers and RIDE ice machines are supplied with 7-foot power cord

Ambient

Air temp	38°C/100° F max.	10°C/50°F min. (best performance below 27˚C/80˚F)
Water temp	32°C/90°F max.	4°C min./40°F (best performance below 21˚C/70˚F)
Water pressure	70 P.S.I. max.	10 P.S.I. min.

Plumbing

	110CR with RIDE ice machine	110CT with integral ice machine	110FB with ice machine in base
Dispenser drain	3/4" FPT	3/4" FPT	3/4" FPT
Ice machine drain	3/4" MPT	3/4" MPT	3/4" MPT
Dispenser water inlet	3/8" FPT	3/8" FPT	3/8" FPT
Ice machine water inlet	–	3/8" FPT	–
RIDE IM water inlet	3/8" OD push-in	–	–
Cond. inlet – w/c only	3/8" FPT	3/8" FPT	3/8" FPT
Cond. drain – w/c only	3/8" FPT	3/8" FPT	3/8" FPT

Note: Water shut-off recommended within 10 feet (3m) of dispenser. Drain to be hard piped and insulated, and maintain slope of at least 1/4" per foot (6mm per 305mm run) of slope. All plumbing connections must be made in accordance with local building codes.

Ventilation clearances

Countertop models with RIDE ice machine (C/E110CR400A/W) – none. 775mm (12") at top advised for service.

Countertop models with integral ice machine (C/E110CT400A/W) – 153mm (6") at top. 153mm (6") each side advised for service.

Freestanding models (C/E110FB400A/W) – 102mm (4") at rear. 305mm (12") at top advised for service.

Field wiring for countertop dispensers with RIDE ice machines

Model	Electrical connection	Current
C110FB400A/W E110FB400A/W	cord provided	220 V 60 Hz, 6.5A 230 V 50 Hz, 6.5A
C110CT400A/W E110CT400A/W	cord provided	220 V 60 Hz, 6.5A 230 V 50 Hz, 6.5A
C110CR400A/W E110CR400A/W	cord provided	220 V 60 Hz 230 V 50 Hz dispenser: 1.5A ice machine: 5.0A

Installation procedures

Before you begin

- **All dispensers must be installed level in both directions to ensure proper operation**
- **Required ventilation and recommended service clearances:**
  - Countertop models with RIDE ice machine (C/E110CR400A/W) — none. 305mm (12") at top recommended for service.
  - Countertop models with integral ice machine (C/E110CT400A/W) — 153mm (6") at top. 153mm (6") each side recommended for service.
  - Freestanding models (C/E110FB400A/W) — 102mm (4") at rear. 305mm (12") at top recommended for service.
- **All countertop dispensers provide the option of taking utilities out the bottom or back of the dispenser.** See counter cutout (Fig. 2) for bottom exiting utilities on units with and without drain pans. For installations where utilities will exit through back of dispenser, refer to back view drawings.

Installing freestanding dispensers

1. Carefully tip dispenser back to expose underside and block up in place.

Do not tilt unit further than 30° off vertical.

2. Remove legs from shipping box (taped to drain pan of dispenser) and screw into dispenser bottom, taking care to seat legs securely against underside of dispenser.
3. Position dispenser in desired location and adjust legs to level in both directions.
4. Connect water supply to 3/8" FPT fitting on back of dispenser (Fig. 1A).
5. Remove 3/4" dispenser drain line plug from back of unit and discard. Connect separate drain lines to 3/4" FPT dispenser drain fitting and 3/4" MPT ice machine drain fitting on back of dispenser (Fig. 1B and 1C.)
6. Run drain lines to wall or floor drain. Provide an air break between the drain lines and drain. If ice machine drain fitting is below an intended wall drain, a condensate pump must be used.
7. If ice machine is water-cooled, connect water-cooled condenser supply line to 3/8" FPT condenser inlet fitting on back of dispenser (Fig. 1D).

   Note: Do not run condenser supply water through ice machine water filter system.
8. Connect condenser drain line to 3/8" FPT condenser outlet fitting on back of dispenser (Fig. 1E).

   Important: Do not connect condenser drain line to any other drain lines.
9. Plug dispenser into 20A rated NEMA 5-20 wall socket.
10. Remove front cover of base section by removing two screws at bottom corners of cover. Allow cover to drop approximately 5mm (3/8") and pull forward.
11. Turn on water supply and check that water level in float reservoir (when full) is within 6mm (1/4") of mark on side of reservoir and that float moves freely. Check for leaks.

Fig. 1 – Rear connections, freestanding models

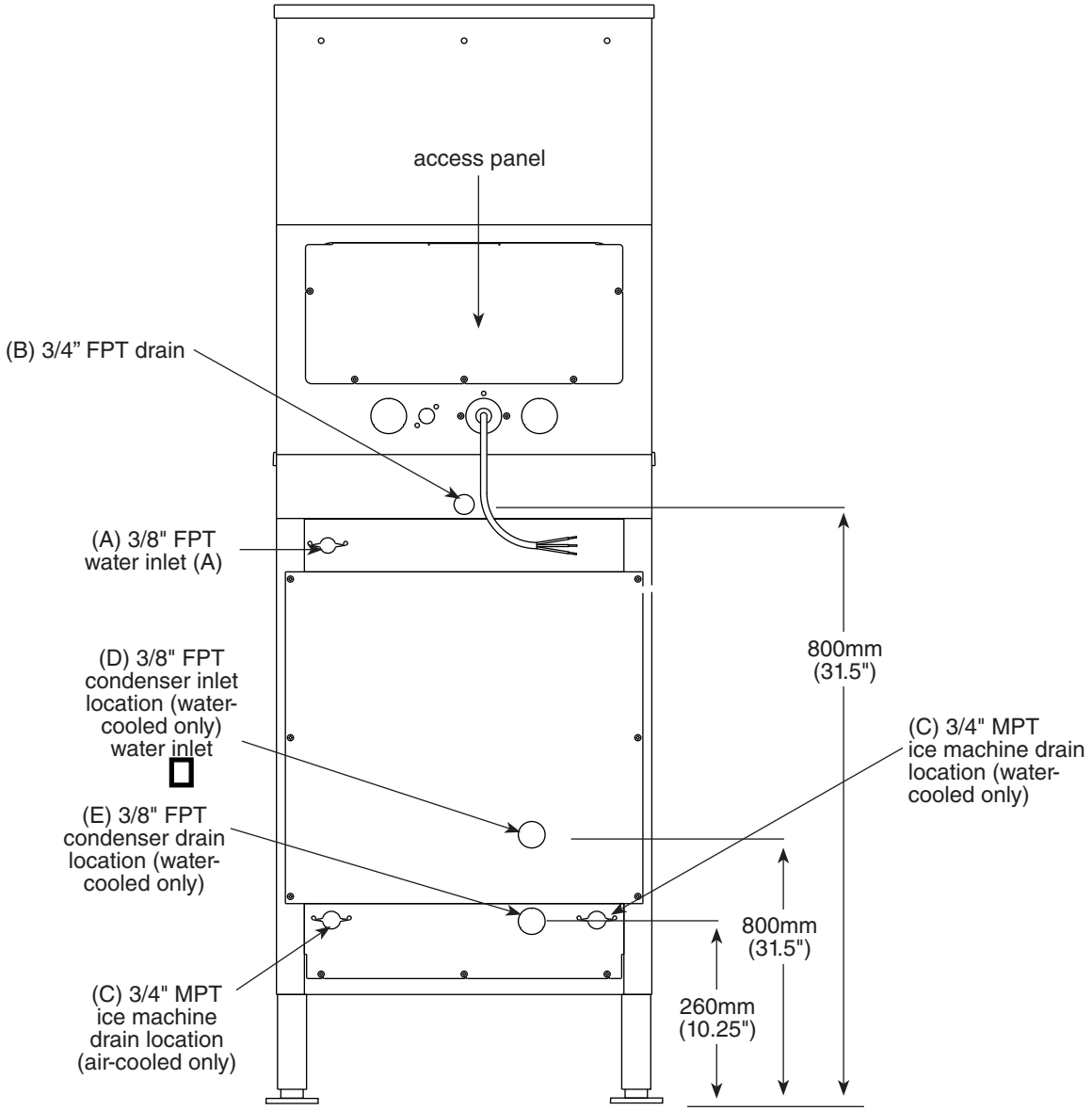

12. Verify that water sensor tabs are immersed in water in reservoir.
13. Remove top front cover by removing two screws at bottom corners of cover. Lift cover slightly and pull forward.
14. If dispenser is equipped with SensorSAFE, remove protective plastic coating from dispense sensor labels.
15. Turn on dispenser power and bin signal rocker switches. Check dispenser and ice machine operation.
16. Sanitize ice machine according to instructions in ice machine manual. Discard sanitized ice.
17. Turn off ice machine bin signal switch.
18. Remove dispenser hopper lid; clean and sanitize dispenser according to instructions.
19. Turn ice machine bin signal switch on and replace front covers, securing with screws.

Installing countertop dispensers

Dispensers with top mount ice machines cannot be mounted on legs. They must be bolted to counter. Use gloves when lifting ice machine to protect hands from sheet metal edges.

1. Position dispenser in desired location, mark dispenser outline on counter and remove dispenser.
2. Drill four 5mm (3/8") holes in counter (Fig. 2) to anchor dispenser to counter.

   Follett countertop dispensers can have any or all utilities run directly through counter or out rear of dispenser. For dispensers with any utilities exiting through counter, make counter cut-out as shown in Fig. 2.
3. If ice transport tube will exit out rear of dispenser, remove ice transport tube knock-out (Fig. 5G) from rear of dispenser.

   Note: Utility connections can be accessed through front of dispenser by removing stainless steel splash panel on front of dispenser, or by removing access panel (Figs. 4, 5) on back of dispenser.
4. If any electric utilities or water line will be connected through rear of dispenser, remove utility knock-out (Fig. 5H) from rear of dispenser and install supplied protective grommet.
5. If power is to be supplied through counter cut-out, complete steps 6-9. If power is to be supplied through rear of dispenser, proceed to step 10.
6. Temporarily remove rear access panel (Figs. 4, 5) from rear of dispenser.
7. Loosen junction box mounting screws. Lift junction box and power cord up until cord and mounting screws clear notches on rear panel of dispenser. Remove Phillips head screws from right side of junction box.
8. Rotate junction box 90 degrees so that screw holes on right side of junction box align with holes on rear dispenser panel. Resecure junction box to dispenser using Phillips head screws.
9. Place power cord inside dispenser and replace access panel (Figs. 4 and 5) on rear of dispenser.

   Note: For dispensers installed with utilities connected through rear of dispenser, it may be easier to make preliminary connections before dispenser is set in place.

Fig. 2 – Counter cut-out, all models

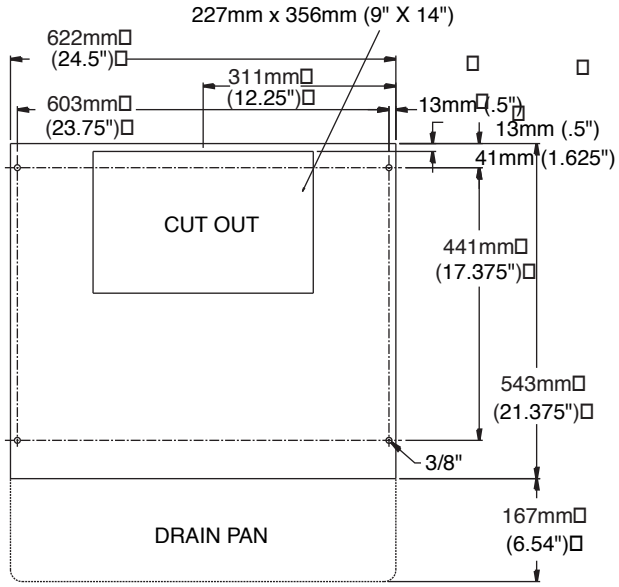

Fig. 3 – Top view, dispenser plumbing connections countertop and wall mount units with drain pan

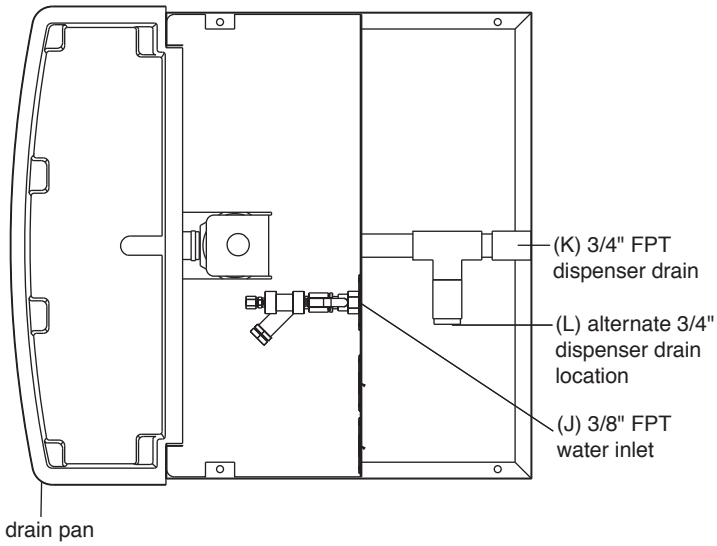

10. Apply a thick bead, approximately. 6mm (1/4") diameter, of NSF listed silicone sealant (Dow-Corning RTV-732 or equivalent) 6mm (1/4") inside marked outline of dispenser.
11. Carefully position dispenser on counter.
12. Remove four screws securing splash panel to front of dispenser and gently lay splash panel on counter. (Water line to solenoid valve can be disconnected from water inlet valve by pushing on ring at end of inlet fitting while pulling on tubing.)
13. Secure dispenser to counter with four 3/8" bolts (supplied by others).
14. Smooth excess sealant around outside of dispenser.
15. Run water station line from back of dispenser through utility knock-out (Figs. 4, 5) or up through counter cut-out. Connect water supply line to 3/8" FPT, (Fig. 3J) fitting on utility flange at bottom of dispenser.
16. Remove 3/4" drain connection plug from either fitting at rear of dispenser, (Fig. 1K) or internal fitting, (Fig. 3L), as appropriate. Connect and run a dedicated drain line to wall or floor drain. An air break should be provided.

If dispenser is equipped with a top mount, water-cooled ice machine complete steps 17 through 20. If equipped with a top mount, air-cooled ice machine proceed to step 21.

17. Connect ice machine water supply line to 3/8" FPT water inlet, (Fig. 4M).
18. Connect ice machine drain line to 3/4 MPT drain connection (Fig, 4N).
19. If ice machine is water-cooled, connect water-cooled condenser supply line to 3/8" FPT condenser fitting on back of dispenser (Fig. 4R).

    Note: Do not run condenser supply water through ice machine water filter system.
20. Connect condenser drain line to 3/8" FPT fitting on back of dispenser (Fig. 4P).

    Important: Do not connect condenser drain line to any other drain lines.
21. Proceed with either RIDE or top-mounted ice machine connection instructions, as appropriate.

Fig. 4 – Rear connections, countertop models with integral ice machines

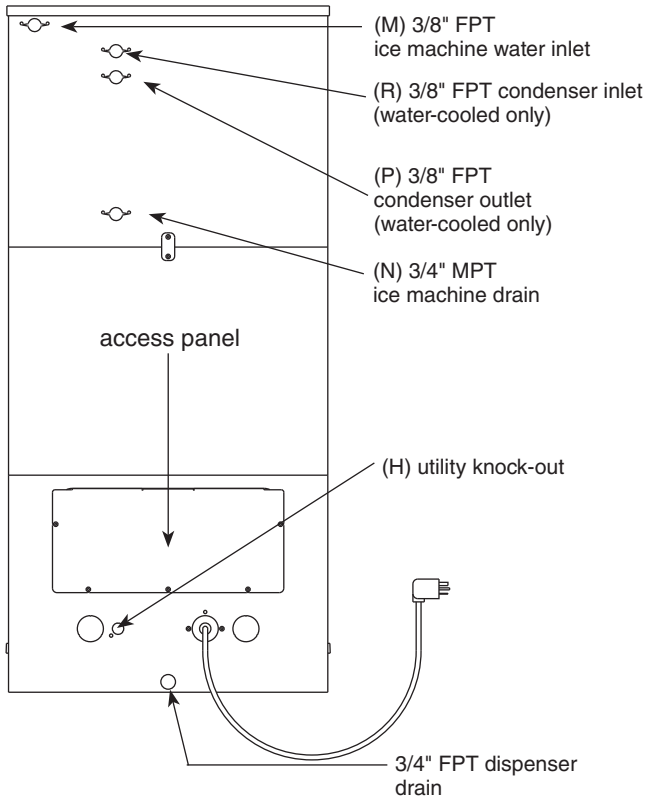

Fig. 5 – Rear connections, countertop models with RIDE ice machines

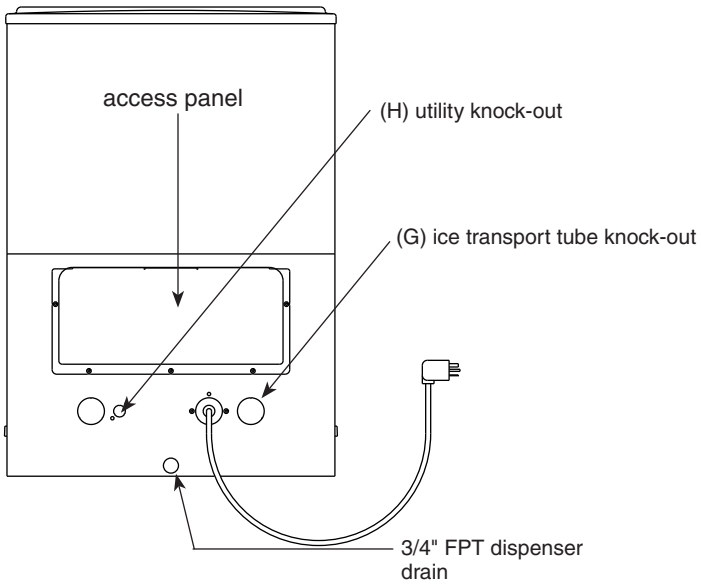

Installing RIDE ice machines

Models C/E110CR400A/W

See Ice machine Installation Manual (form #00124453) for critical installation instructions for RIDE ice machines. Failure to comply with these instructions will result in poor performance and void warranty.

1. Install RIDE ice machine following instructions in ice machine manual.
2. Run uninsulated ice transport tube from dispenser through ice transport tube knock-out, (Fig. 5G) or through counter opening to ice machine.
3. Insulate ice transport tube by sliding insulation over tube.
4. Adjust insulation to cover all exposed ice transport tubing including tubing inside dispenser cabinet.
5. Check that insulated ice transport tube runs continuously uphill (with no dips) from ice machine to dispenser.
6. Run bin signal wire from dispenser through utility knockout, (Fig. 5F) or counter cutout to the ice machine and connect bin signal wire (two-conductor twist lock) to bin signal plug on ice machine.
7. Plug dispenser power cord into 20A rated NEMA 5-20 wall socket.
8. Turn on dispenser water supply and check for leaks. Replace splash panel.
9. Remove top front cover by removing two screws at bottom corners of cover. Lift cover slightly and pull forward. Turn on power and bin signal rocker switches. Replace front cover and secure with screws. Test operation.
10. Clean and sanitize ice machine following instructions in ice machine manual. Discard sanitized ice.
11. Clean and sanitize dispenser hopper following instructions on page 13. Installation is complete.

Fig. 6 – Ice transport tube and ice level control stat mounting for freestanding dispensers and countertop units with RIDE ice machine

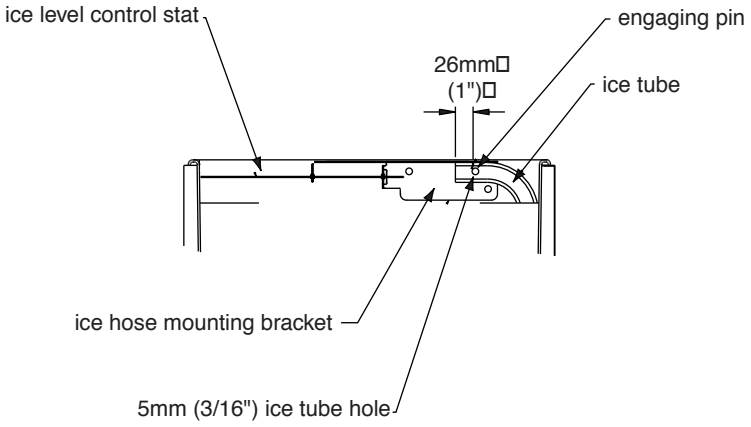

Installing top mount ice machines

Models C/E110CT400A/W

Dispensers with top mount ice machines cannot be mounted on legs. They must be bolted to counter. Use gloves when lifting ice machine to protect hands from sheet metal edges.

1. Remove dispenser top front cover by removing two screws at bottom corners of cover, lifting cover slightly and pulling forward.
2. Remove ice machine compartment top and side panels.
3. Remove ice machine hold-down bracket from front of ice machine compartment.
4. Lift ice machine onto dispenser top and slide ice machine completely into position, compressor end first. Front of ice machine base must be flush with front of dispenser.
5. Reinstall hold down bracket on front of ice machine with power cord and bin signal cords in notch. Do not cut or pinch cords.
6. Insert loose end of ice transport tube through bracket (on ice machine base) into hopper access hole. Be sure that transport tube is secured under retainer on float reservoir bracket (Step 2, Fig. 7). Tighten transport tube clamp screw to secure ice transport tube.
7. Connect plastic water supply line to fitting at top of float reservoir.

Fig. 7 – Ice transport tube

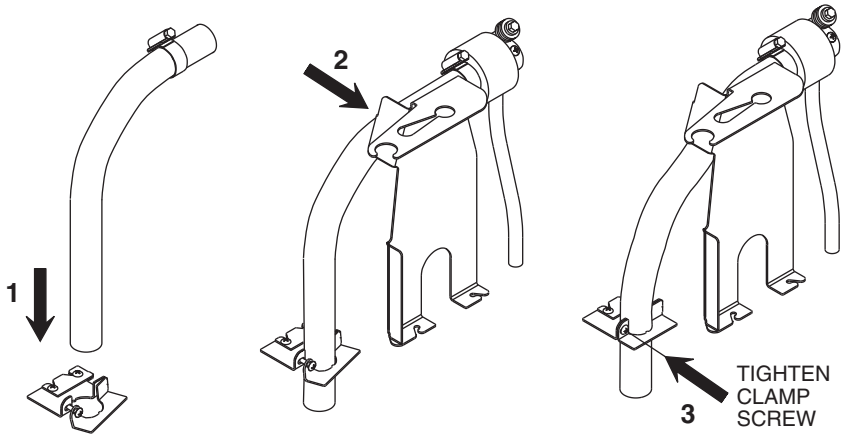

8. Connect vinyl drain line from dispenser securely to drain line on ice machine.
9. Connect ice machine two-lead bin signal twist lock plug, and three-lead power twist-lock plug, to dispenser twist-lock connectors.
10. On dispensers equipped with water-cooled ice machines, connect condenser water supply and drain lines to condenser fittings on ice machine.
11. Turn on water supply and check that water level in float reservoir (when full) is within 1/4" (6mm) of mark on side of reservoir and that float moves freely.
12. Verify that water sensor tabs are immersed in water in reservoir. Check for leaks. Replace splash panel.
13. Install appropriate plug on power cord and insert into wall socket.
14. If dispenser is equipped with SensorSAFE remove protective plastic coating form dispense sensor labels.
15. Clean and sanitize ice machine following instructions in ice machine manual.
16. Remove dispenser hopper access lid and clean and sanitize dispenser according to instructions on page 14.
17. Replace front cover and secure with screws. Installation is complete.

Fig. 8 – Ice transport tube and ice level control stat mounting for units with top-mounted ice machines

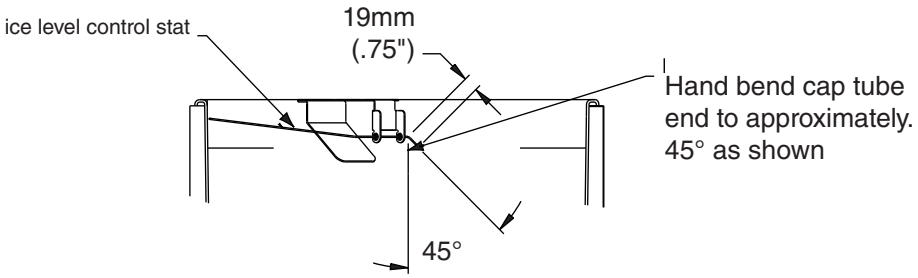

User information

How the dispenser works

Follett's 110 series automatic load ice and water dispensers receive ice from Follett's 181kg (400 lb)/day ice machine located in the dispenser base, in the cabinet top or in a remote location up to 6m (20 ft) away. Ice produced is stored in the bin section of the dispenser. When dispensing is activated, the wheel motor is energized, causing the wheel to turn. This moves ice to the dispense chute where it drops by gravity into the container held below the chute.

In Follett's continuous icemaking process, water freezes to the inside walls of the stainless steel evaporator. A rotating stainless steel auger carries the ice to the top of the evaporator where it is compressed and extruded through a nozzle on the outlet port. The ice is then pushed through a tube to the dispenser bin. When the storage area is full, a bin thermostat opens and shuts the ice machine off to avoid over-filling of the bin. The ice machine will restart after 20 minutes if the bin is calling for ice.

How the SensorSAFE accessory works

Follett's SensorSAFE accessory maximizes sanitation and minimizes the possibility of cross-contamination by eliminating physical contact between the cup or container and dispenser. Sensors in the panel use reflected infrared light to detect the presence of the container and send a signal to a control board which then activates the appropriate components for ice or water dispensing.

The SensorSAFE package includes a cleaning switch under the left side of the front cover which temporarily shuts off dispensing to allow cleaning of the panel and lenses. If the switch is not turned back on after cleaning, the dispenser automatically resets after two minutes for normal operation.

SensorSAFE also includes a time limit safety feature which automatically stops ice dispensing after one minute of continuous dispensing. Dispensing can be resumed by moving the container away from the dispenser and returning it to the activation zone.

How the chilled water accessory works

Follett's chilled water accessory uses ice from the dispenser's storage hopper to chill incoming water supplied to the water station. The water chiller assembly is located in the dispenser cabinet under the storage hopper. As ice is dispensed, it is automatically fed into the water chiller assembly to chill the water coil inside the assembly.

Cleaning/descaling and sanitizing

Periodic cleaning/descaling and sanitizing of Follett's ice and water dispenser and ice machine system is required to ensure peak performance and delivery of clean, sanitary ice. The recommended cleaning procedures that follow should be performed at least as frequently as recommended and more often if environmental conditions dictate.

Cleaning of the condenser can usually be performed by facility personnel. Cleaning/descaling and sanitizing of the ice machine system should be performed by your facility's trained maintenance staff or a Follett authorized service agent. Regardless of who performs the cleaning, it is the operator's responsibility to see that this cleaning is performed according to the schedule below. Service problems resulting from lack of preventive maintenance will not be covered under the Follett warranty.

Recommended cleaning/descaling and sanitizing intervals*

Symphony	Frequency
Drain Line	weekly
Drain Pan/Drip Pan	weekly
Exterior	as needed
Condenser	monthly (air-cooled only)
Dispenser and Components	semi-annually
Ice Machine	semi-annually
Chilled Water Accessory	semi-annually
Transport Tube	semi-annually
Ice Storage Area/Bin	semi-annually

* Ice machine and dispenser must be cleaned and sanitized prior to start-up.

Weekly

CAUTION!

- Do not use solvents, abrasive cleaners, metal scrapers or sharp objects to clean any part of the dispenser.

Dispenser drain pan and drain line

1. Pour 1 gal. (3.8 L) of hot tap water into drain pan to flush drains.

Splash panel front, SensorSAFE infrared dispensing

1. Deactivate dispensing by pressing and releasing clean switch located on left side of unit under top front cover.
2. Clean lens and splash panel front using a soft cloth and mild, non-abrasive, non-chlorine based cleaner.
3. Reactivate dispensing by pressing and releasing clean switch again.

Monthly

CAUTION!

- Do not use solvents, abrasive cleaners, metal scrapers or sharp objects to clean any part of the dispenser.

Condenser (air-cooled ice machine only)

1. Use a vacuum cleaner or stiff brush to carefully clean condenser coils of lint and debris to ensure optimal performance.

Semi-Annually (more often if conditions dictate)

- A cleaning/descaling and sanitizing procedure should always include both the ice machine and dispenser; ice machine should be cleaned and sanitized first, followed by the dispenser.
- Icemaking system can be cleaned/descaled in place.

To ensure that your ice machine and dispenser are cleaned/descaled and sanitized properly, proceed as follows:

1. Clean/descale the ice machine
2. Sanitize the ice machine
3. Clean/descale the dispenser
4. Sanitize the dispenser

⚠ CAUTION!

- Wear rubber gloves and safety goggles (or face shield) when handling cleaner or sanitizer mixtures.
- Use only Follett approved cleaners.
- It is a violation of Federal law to use Solution A or Solution B in a manner inconsistent with their labeling.
- Do not use solvents, abrasive cleaners, metal scrapers or sharp objects to clean any part of the dispenser.

Solution A: Following manufacturer's instructions, mix cleaning solution of 1 gal. (3.8L) 120 F (49 C) water and 7 oz. (198g) (one 7 oz. packet) of Follett SafeCLEAN™ ice machine cleaner/descaler (P/N 00132001).

Solution B: Following manufacturer's instructions, mix a sanitizing solution of 1 gal. (3.8L) 120 F (49 C) water and 1.6 oz. (48ml) Nu-Calgon IMS-II Sanitizer (P/N 00979674).

Clean/descale and sanitize ice machine (if applicable)

- Units with ice machines require ice machine cleaning/descaling and sanitizing at least every 6 months, and more often if conditions dictate. Cleaning/descaling and sanitizing the ice machine will result in better performace and extend ice machine life. Refer to Ice Machine Operation and Service Manual for specific instructions.

Clean/descale dispenser

1. Remove *and discard* all ice from storage hopper.
2. Ensure power is disconnected. Working inside storage area, remove center thumbscrew from dispense wheel, tilt wheel up toward back to clear baffle and disengage wheel from motor shaft.
3. Remove dispense chutes.
4. Thoroughly wipe lid, dispense wheel, baffle and dispense chutes with cloth soaked in **Solution A**.
5. Wipe all bin surfaces (including the area under dispense wheel) with a damp cloth wrung out in **Solution A**.

Note: To avoid possible damage to dispense motor assembly, use only a *damp* cloth to clean the storage bin. Do not allow water to run through bottom of bin area.

6. Remove grille and wash with **Solution A**. Rinse thoroughly with clean water.
7. Rinse all above items with damp cloth wrung out in clear water.

Sanitize dispenser

8. Wipe all above items with damp cloth wrung out in **Solution B** to sanitize. Do not rinse.
9. Reinstall all parts and replace any panels removed prior to cleaning.
10. Pour 1 gal. (3.8 L) of hot tap water into drain pan to flush drains.
11. If the dispenser is equipped with a Chilled Water Accessory continue to Step 11.1; if not, skip to Step 12.
    - **11.1** Remove four screws securing splash panel.
    - **11.2** Disconnect 3/4" (19mm) drain line from bottom of chilled water canister.
    - **11.3** Loosen (do not remove) screw securing front bracket of chilled water canister to bottom of dispenser hopper.
    - **11.4** Rotate canister clockwise to release front bracket, then pull canister forward to disengage rear bracket.
    - **11.5** Remove chilled water coil from canister and clean with cloth wrung out in **Solution A**.
    - **11.6** Wipe inside of chilled water canister with cloth wrung out in **Solution A**.
    - **11.7** Rinse all above items with damp cloth wrung out in clear water.
    - **11.8** Sanitize all above items with damp cloth wrung out in **Solution B**. Do not rinse.
    - **11.9** Reinstall chilled water coil into canister (rubber alignment grommet on coil tubing must be located outside chilled water canister to hold coil securely against canister wall).
    - **11.10** Reinstall chilled water assembly on dispenser and tighten screw securing front bracket.
    - **11.11** Reconnect 3/4" (19mm) drain line to chilled water canister.
    - **11.12** Reinstall splash panel and top front cover.
12. If so equipped, turn ice machine ON and begin to make ice (ice machine should start immediately with power and bin signal supplied).
13. After approximately 30 minutes, test dispenser for proper dispensing.

Service information

Wiring diagrams

How unit works — lever models

The dispense wheel motor and dispense solenoid are energized through the power and ice dispense switches. The water solenoid valve is energized through the power and water dispense switches. The ice machine receives the bin signal through the power switch, the normally closed bin thermostat and the ice machine switch. When the bin level thermostat is calling for ice, a 115V bin signal is applied to the bin signal terminals on the ice machine circuit board. When ice builds up around the bin thermostat, the contacts open, cutting the bin signal to the ice machine.

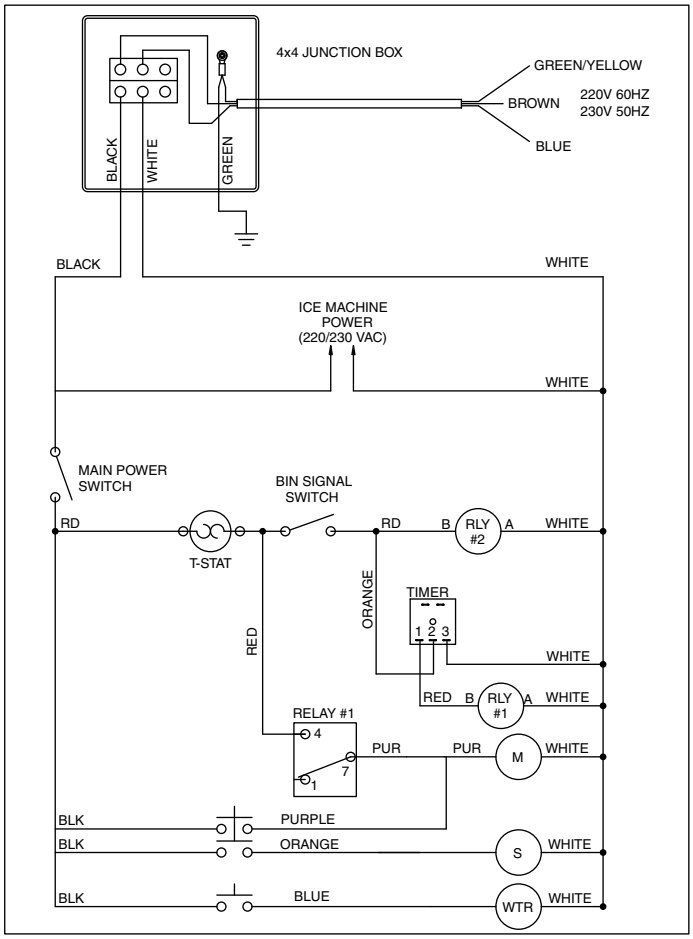

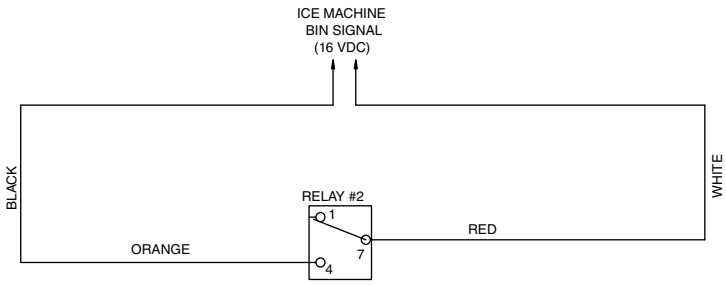

How unit works — SensorSAFE models

SensorSAFE models provide “touchless” ice and water dispensing. When a container is placed within the actuation zone below the ice or water chute on SensorSAFE dispenser models, an infra-red signal reflects off the container and is detected by the sensor. The sensor then sends a signal to the control board to activate the appropriate components to dispense ice or water. LEDs on the board indicate when the board is receiving a signal from the sensors.

A safety, shut-off feature automatically shuts off dispensing after one minute of continuous activation. Dispensing can be restarted by moving the container away and then returning it to the actuation zone.

Dispensing can be temporarily suspended for cleaning by depressing and releasing the clean switch, located under the left side of the top front cover. Depressing and releasing the button a second time will return the dispenser to normal operating state. If the clean switch is not depressed a second time, the dispenser will automatically resume normal dispense operation (CLN LED goes out) after two minutes. An LED on the control board will light to indicate that the dispensing has been suspended by activation of the clean switch.

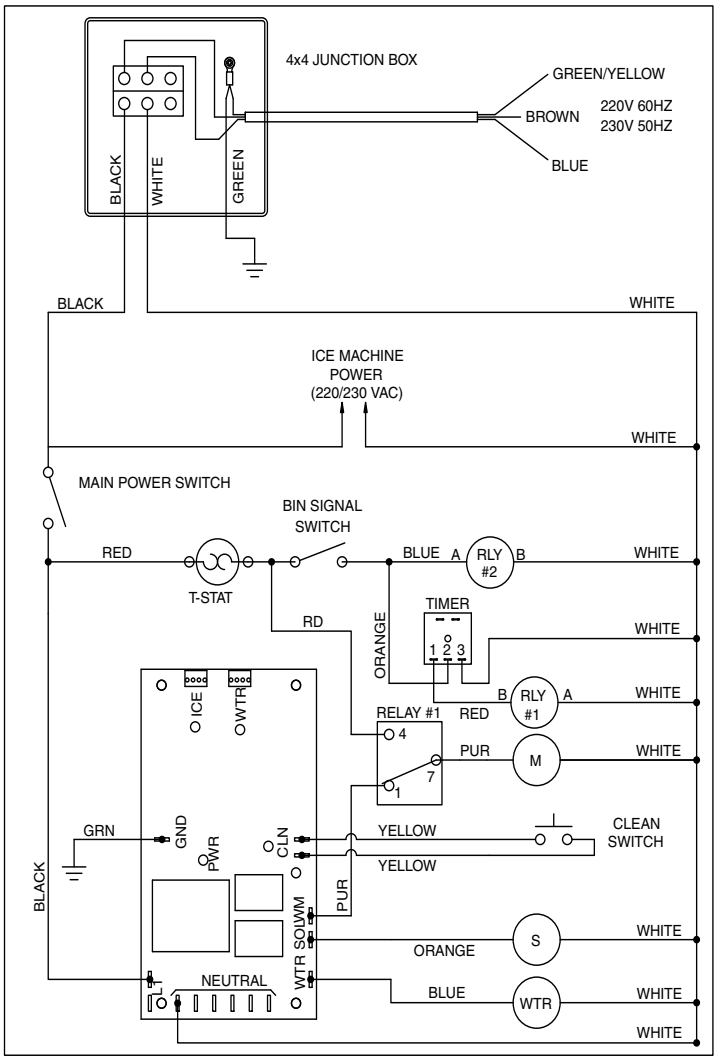

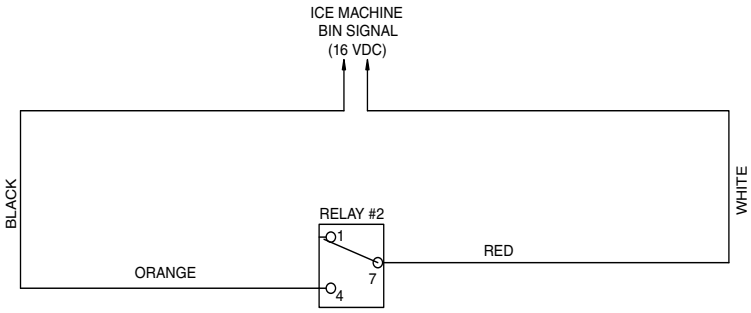

Dispenser troubleshooting

Disconnect power to dispenser and ice machine before putting hands or arms in storage area, or attempting any repair or service to equipment.

Before calling for service:

- Check that there is ice in dispenser bin area
- Check that congealed cubes are not causing a jam
- Check that all switches and circuit breakers are on
- Check that all drains are clear

Symptom	Possible cause	Solution
1. Does not dispense ice	a. Faulty dispense gate b. Faulty dispense solenoid c. Power switch off or faulty d. Faulty dispense switch e. Wheel motor malfunction f. Drive chain off g. Sprocket key missing	a. Replace dispense gate b. Replace dispense solenoid c. Check switch; turn on or replace if faulty d. Replace switch e. Check motor and replace as required f. Reinstall chain g. Install key and tighten sprocket
2. Does not dispense water	a. Dispense switch faulty b. Faulty water solenoid c. Solenoid plugged by debris	a. Check switch and replace if faulty b. Check solenoid and replace if faulty c. Remove and clean valve
3. Water runs continuously	a. Dispense switch contacts burned shut b. Debris preventing valve from closing	a. Check switch and replace if faulty b. Remove and clean valve
4. Dispense wheel rotates continuously	a. Dispense switch contacts burned shut b. Faulty level fill timer c. Faulty level fill relay	a. Replace dispense switch b. Replace level fill timer c. Replace level fill relay
5. Ice machine runs continuously	a. Faulty or incorrectly positioned bin thermostat b. Incorrect field wiring	a. Check for proper positioning (middle of adjustment range); if thermostat does not open when ice is placed on capillary tube, replace thermostat b. Check that ice machine receives bin signal from dispenser
6. Ice dispenses by itself	a. Faulty dispense gate b. Faulty dispense solenoid c. Faulty dispense switch	a. Replace dispense gate b. Replace dispense solenoid c. Replace dispense switch

Troubleshooting SensorSAFE board and sensors

Board guide

LEDs, when illuminated, indicate the following:

PWR	(board power)
CLN	(cleaning, no dispensing cycle)
ICE	(ice dispensing activated)
WTR	(water dispensing activated)

Terminals:

L1	(incoming power, hot)
L2	(neutral terminals)
WTR	(power terminal for water solenoid)
SOL	(power terminal for dispense gate solenoid) not used
WM	(power terminal for wheel motor)
CLN	(terminals for clean cycle switch)

Problem: Does not dispense ice or water

Action	LED Status PWR	CLN	ICE/WTR	Solution
Check LEDs on control board	OFF	OFF	OFF	Check circuit breakers and power switch; restore power or replace defective switch
	ON	ON	OFF	Depress clean switch located under left side of front cover to return board to normal operation
Place cup under drop zone	ON	OFF	OFF	Troubleshoot appropriate lens/sensor and replace if required (see Lens/Sensor Troubleshooting below)
	ON	OFF	ON	Verify power on appropriate output terminal (WTR SOL or WM) on control board and replace board if required; if board tests okay, troubleshoot appropriate dispenser component

Problem: Dispenses ice or water continuously

Action	LED Status PWR	CLN	ICE/WTR	Solution
Check LEDs on control board	ON	OFF	ON	Troubleshoot appropriate lens/sensor and replace if required (see Lens/sensor troubleshooting below)
	ON	OFF	OFF	If there is power on any output terminal (WTR, SOL or WM) on control board, replace board Remove lens protective cover; adjust funnel so water doesn't drip down lens or behind splash panel

Lens/sensor troubleshooting

1. Turn dispenser power switch off.
2. Remove splash panel.
3. Disconnect wires from output terminal(s) (WTR, SOL, WM) on board.
4. Gently remove appropriate sensor/mounting block assembly from panel by moving block sideways until edge of block clears retaining tab of panel.
5. Inspect lens and sensor assembly for foreign material and remove using non-abrasive cleaner.
6. Turn dispenser power on and test sensor by moving hands through activation area (no closer than1.9mm/3/16") in front of sensor.
7. If LED on board turns on and off, sensor is working properly and dispenser may be reassembled. If LED does not come on, switch sensor leads on board and retest. If the opposite LED comes on, board is defective and must be replaced. If LED does not come on, sensor is defective and must be replaced.

Disassembly and replacement instructions

Dispense chute removal

1. Remove dispenser front cover.
2. Slide plastic dispense chute cover up and out to remove.
3. Pull out four white plastic fasteners and remove dispense chute.

Dispense wheel removal and installation

Note: Models with top mount ice machines require removal of ice machine before removing wheel.

1. Remove all ice from storage area of dispenser.
2. Remove center thumbnut from dispense wheel.
3. Remove thumbnuts holding baffle inside bin and remove baffle, remove 1/4" bar.
4. Tilt rear of wheel up and lift off motor drive shaft.
5. After reinstalling wheel, secure baffle loosely with thumbnuts, but do not tighten.
6. Place a 3.2mm (1/8") spacer against wheel and allow baffle to drop until it touches spacer.
7. Tighten thumbnuts and remove spacer.

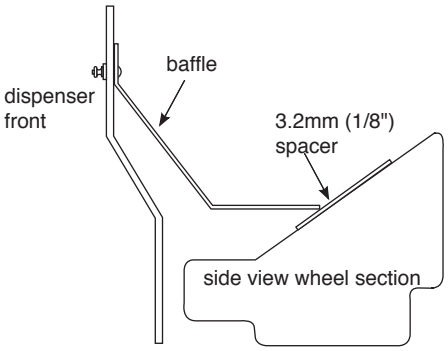

Drive bar removal

1. Remove dispense wheel from dispenser (see above).
2. Pull drive bar out of its channel in bottom of wheel.

Wheel motor assembly removal

1. Shut water off; remove front cover.
2. Remove dispense wheel and dispense chute cover (see above).
3. Remove splash panel. Water line to solenoid valve can be disconnected from water inlet valve by pulling on ring at end of inlet fitting. Disconnect wiring to splash panel.
4. Disconnect wires on motor.
5. Remove four bolts (7/16" socket) holding motor assembly to bottom of dispenser.
6. Remove motor assembly.

Ice transport tube replacement

Top mount ice machines, model C/E110CT400A/W

Only use tubing supplied by Follett Corporation.

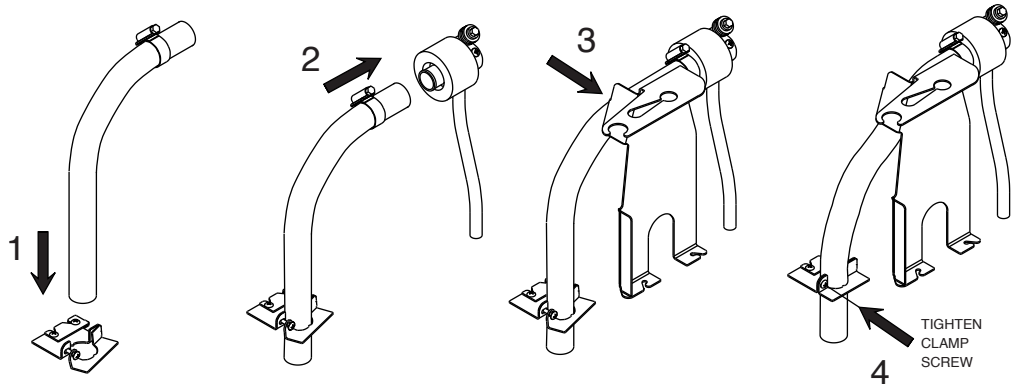

Ice transport tube replacement

Models C/E110FB400A/W, C/E110CR400A/W

Correct installation of ice transport tube is critical to RIDE ice machine performance. Replacement ice transport tubes for RIDE ice machines must be insulated and run continuously from ice machine to dispenser with no dips or bends with a radius of less than 153mm (6").

1. Remove top and rear access panel from dispenser (lower front panel in freestanding unit).
2. Disconnect existing ice tube from engaging pin on transport tube bracket in ice storage bin evaporator and pull down through dispenser chase.
3. Disconnect opposite end of tube from ice machine.
4. Run end of new ice transport tube with 5mm (3/16") hole through ice transport tube knock-out, (Fig. 5G) in back of dispenser or through counter into bottom of dispenser, being careful to avoid any bends with less than 153mm (6") radius.
5. Insert tube in internal chase in rear inside corner of dispenser (left side as you face dispenser) and push up into storage area.
6. Push the 5mm (3/16") hole near end of tube into pin on ice tube bracket (see drawing below).

Steps 7-8 for units with RIDE ice machines only

7. Install supplied insulation to run of transport tube required for your site, leaving approximately 51mm (2") of tube exposed at free end.
8. Check that insulated tube runs continuously uphill to dispenser with no dips.

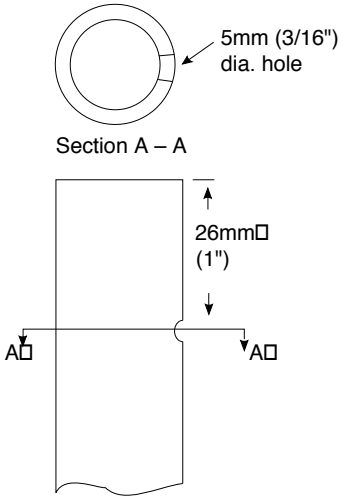

All units

9. Slip supplied hose clamp onto tube and push tube onto exit port of evaporator.

Do not twist hose when securing to evaporator.

Only use tubing supplied by Follett Corporation.

10. Fasten tube on port with hose clamp, being sure that clamp is positioned on evaporator side of nozzle flange.
11. Tighten clamp.

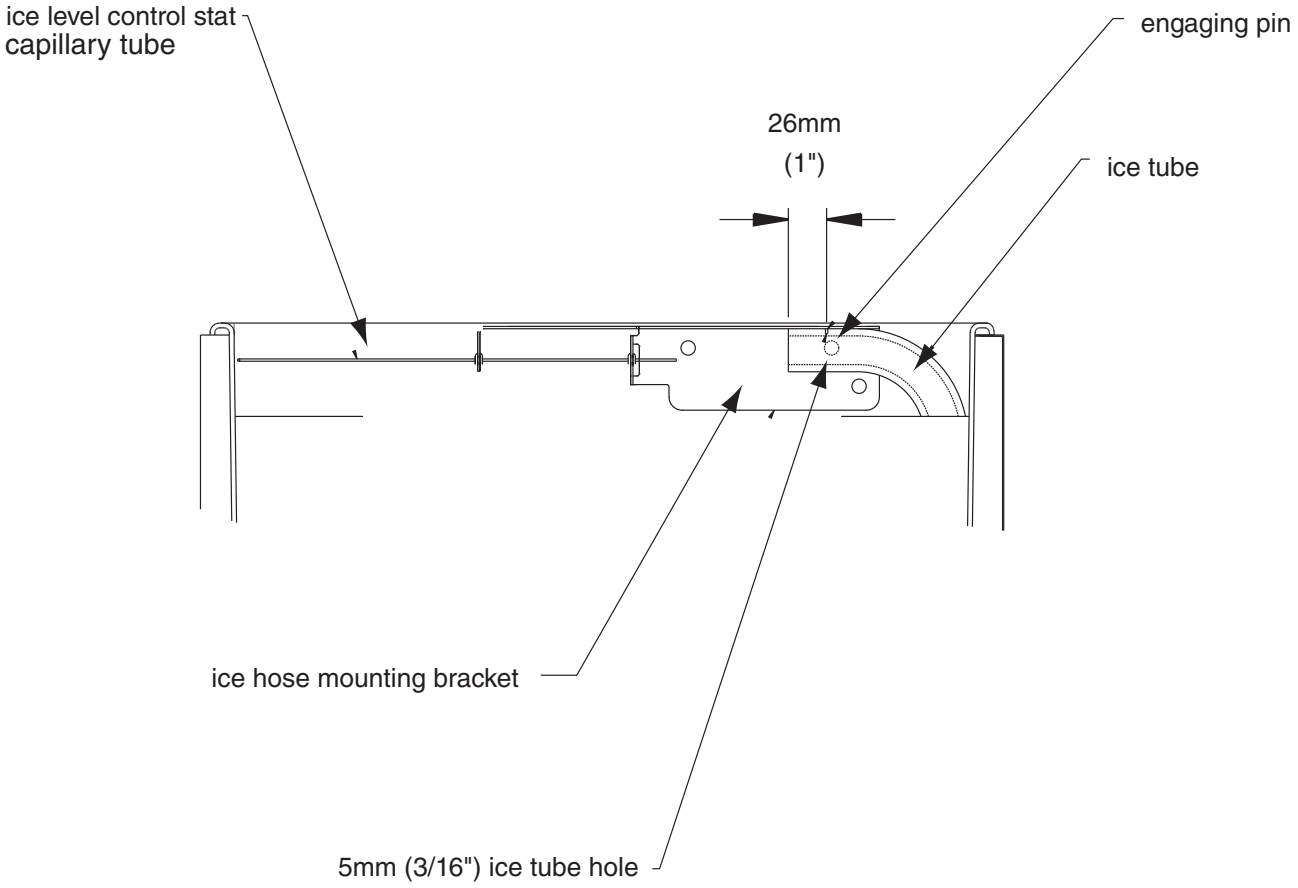

Thermostat locations

Thermostat locations – C/E110CT400A/W

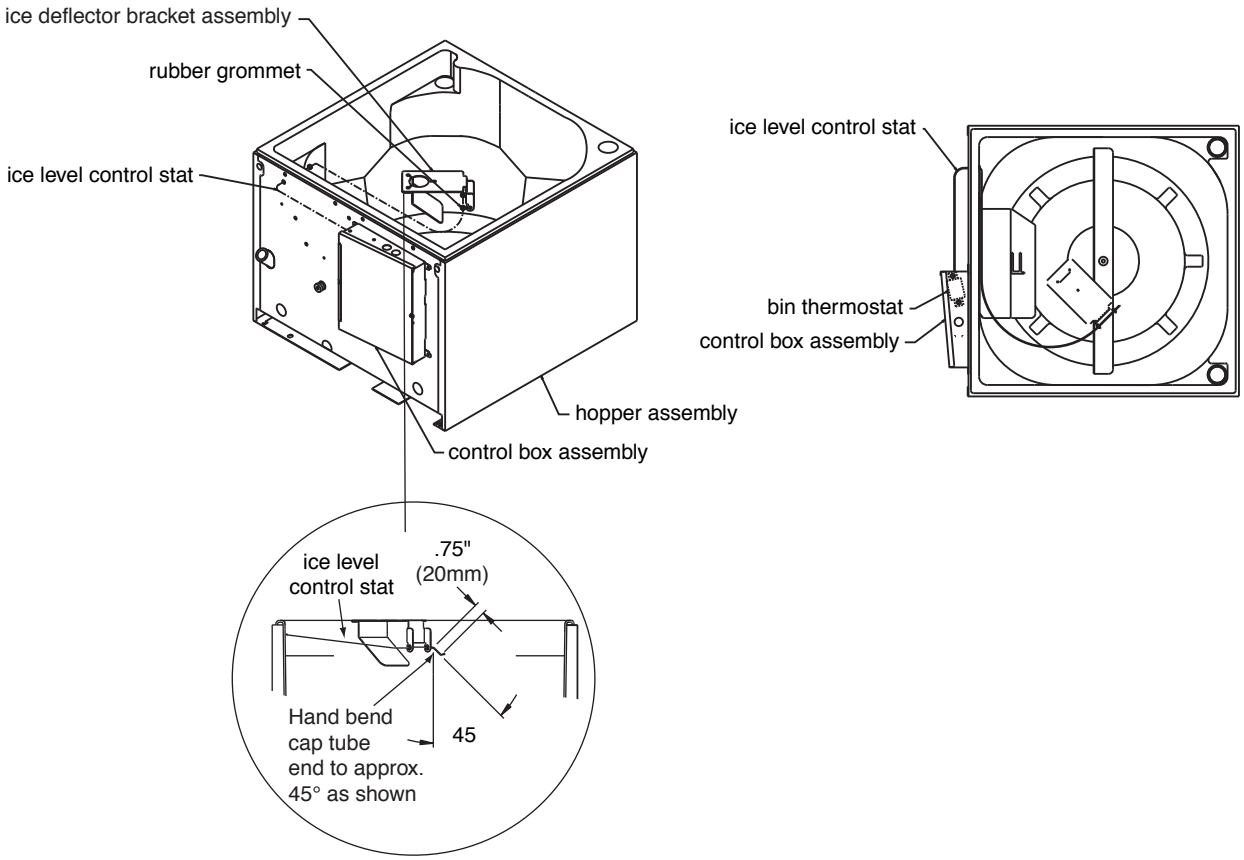

Thermostat locations – C/E110CR400A/W, C/E110FB400A/W

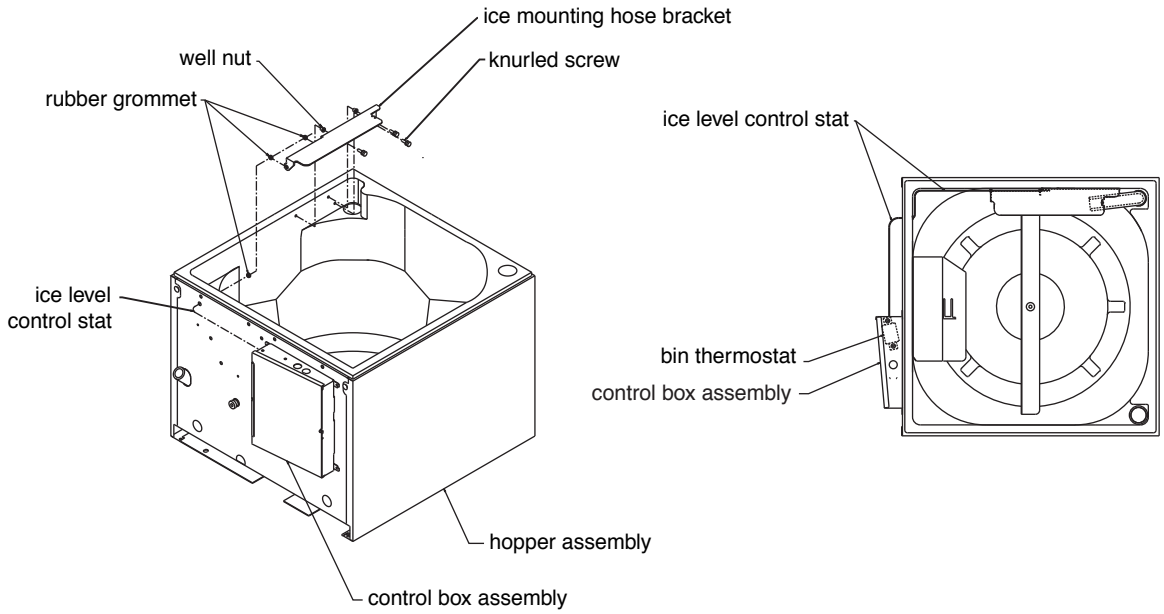

Parts

Dispenser exterior

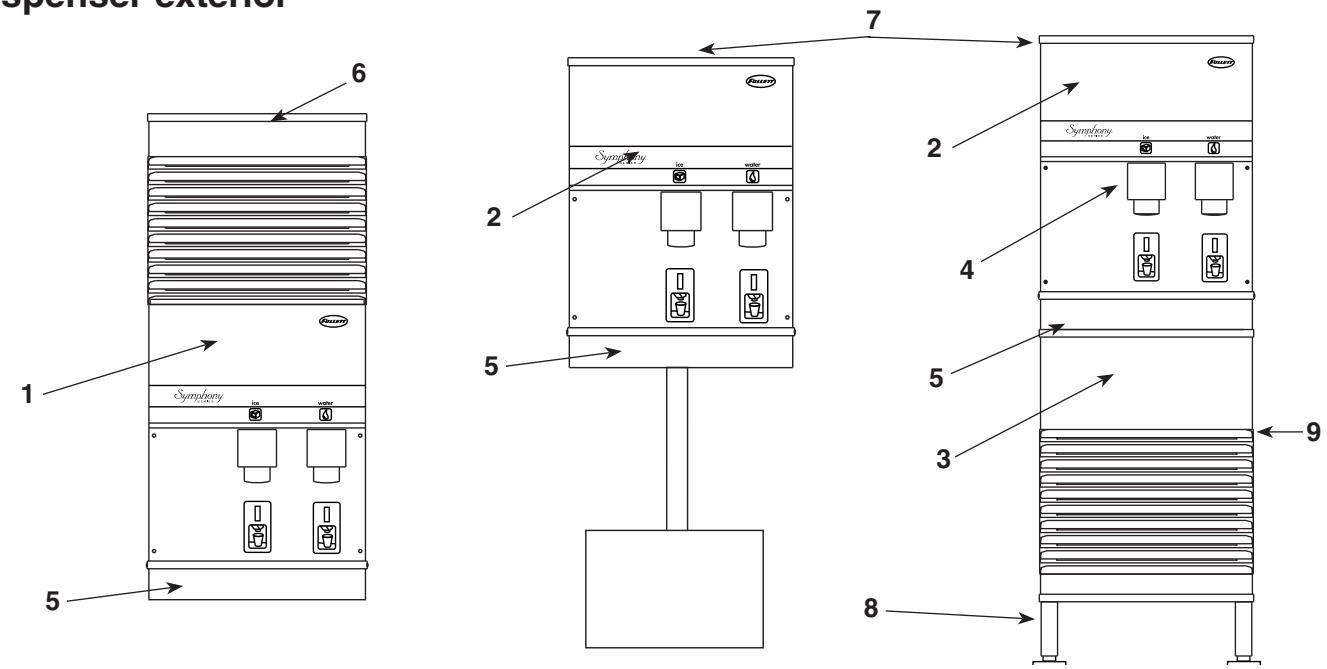

Reference	Description	Part #
1	Cover, top front, 110 countertop (CT)	502756
2	Cover, top front, 110 countertop unit with RIDE ice machine (CR) & freestanding (FB)	502703
3	Cover, lower section, 110 freestanding (FB) units	502704
4	Cover, dispense chute	502681
Not shown	Knurled screws, front cover	501100
5	Drain pan	502705
Not shown	Grille, drain pan	502706
Not shown	Drain pan and base assembly (includes 502705 and 502706)	502779
6	Lid, ice machine, 110, countertop (CT)	502709
7	Lid, 110, countertop (CR) units with RIDE ice machines & freestanding (FB) units	502702
Not shown	Leg kit, for freestanding units – set of 4	502088
8	Single leg, for freestanding units	502298
Not shown	Strainer, water faucet and ice machine (models with integral ice machine)	500376
Not shown	Drain tube assembly	502711
Not shown	Drain line adapter	00112854
Not shown	Mounting plate/fitting, water inlet	502100
Not shown	Tee, water inlet	502433
Not shown	Valve, water shut-off	502222
Not shown	Fitting, drain and mounting plate (units with integral ice machine)	502268
9	Base stand assembly, countertop dispenser	502716
Not shown	Assembly, water inlet, freestanding units (includes valve, tee and strainer)	502225
Not shown	Drain fitting, brass, ice machine, freestanding units	502701
Not shown	Drain fitting, plastic, ice machine (includes screws)	00109728
Not shown	Cord, power, dispenser	502776
Not shown	Cord & plug, female, bin signal, remote ice machine	502777
Not shown	Cord & plug, female, bin signal, top mount ice machine	502816
Not shown	Cord & plug, female, bin signal, freestanding	502817
Not shown	Clean switch, SensorSAFE	502359
Not shown	Cord & plug, ice machine power, top mount	502788
Not shown	Cord & plug, female, ice machine power, freestanding	502786
Not shown	Caster	502805

Dispense chute and splash panel areas (lever models) — Serial Number E08194 and above

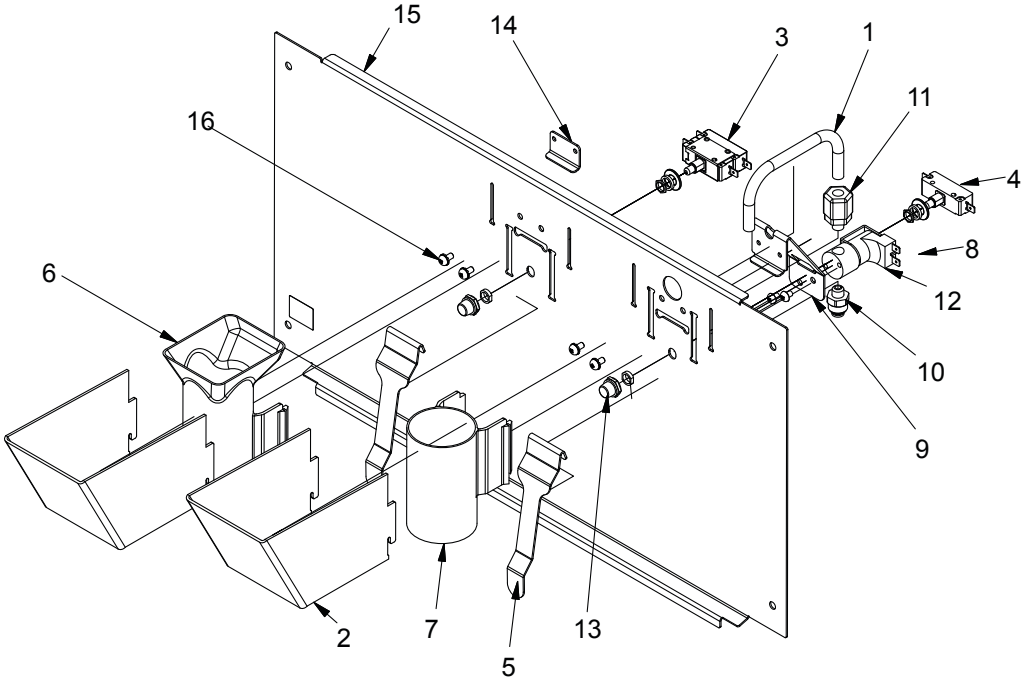

Reference	Description	Part #
1	Tube, water station	502356
2	Cover, dispense chute	502681
3	Switch, dispense, ice, lever actuated (includes 501841)	501829
4	Switch, dispense, water, lever actuated (includes 501841)	502359
5	Lever, dispense	00976845
6	Chute, ice (with Agion® antimicrobial product protection[1])	01042787
7	Chute, water (with Agion)	01042795
8	Solenoid assembly, water, 220 V, 60 Hz/230 V, 50 Hz (includes solenoid valve, tube, bracket, inlet and outlet fittings)	01049139
9	Bracket, lever and water solenoid	01039635
10	Fitting, inlet, 1/4" tube x 1/8 MNPT straight	00991232
11	Fitting, outlet, 1/8" MPT x 3/8" comp	502246
12	Solenoid valve, water, 220 V, 60 Hz/230 V, 50 Hz	502926
13	Boot, dispense switch button	501841
14	Bracket, lever	00958793
15	Splash panel, lever dispense	01039742
16	Fastener, 10-32 x 3/8" stainless steel	00982421
Not shown	Tubing, water station, thermoplastic, 1/4" OD (sold by the foot)	502079
Not shown	Splash panel, lever dispense complete assembly	01049113

[1] Disclaimer: Antimicrobial protection is limited to the treated components and does not treat water or ice.
Agion is a registered trademark of Agion Technologies, Inc, Wakefield, MA, USA.

Dispense chute and splash panel areas (lever models) — Serial Numbers below E08193

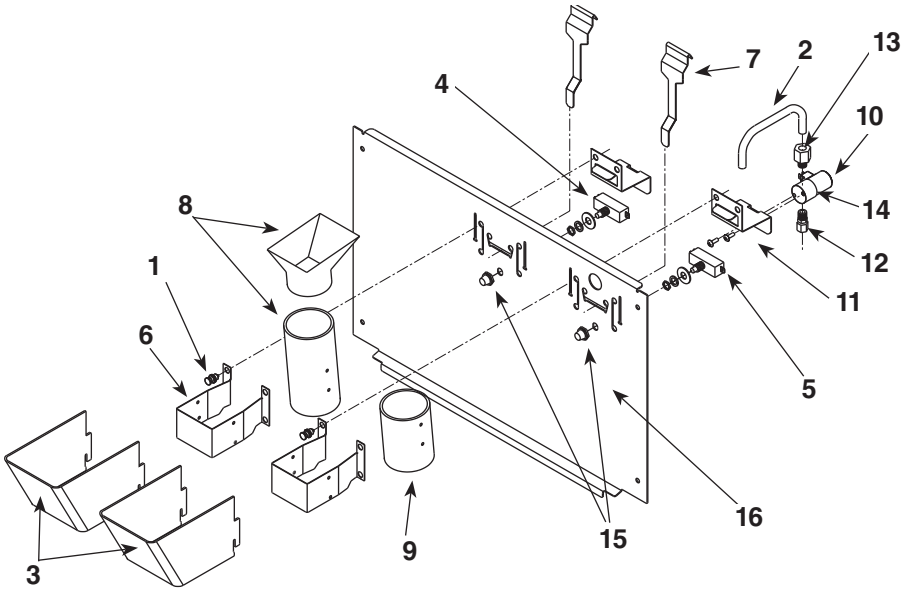

Reference	Description	Part #
1	Fastener, dispense chute bracket	502057
2	Tube, water station	502356
3	Cover, dispense chute	502681
4	Switch, dispense, ice, lever actuated (includes 501841)	501829
5	Switch, dispense, water, lever actuated (includes 501841)	502359
6	Bracket, chute (includes fasteners 502057)	502247
7	Lever, dispense	502358
8	Chute and funnel, ice	502248
9	Chute, water	502249
10	Solenoid assy, water (includes 502926, 502356, 502246, 502355 and 502262) 220 V, 60 Hz/230 V, 50 Hz	502927
11	Bracket, water solenoid and lever	502355
12	Fitting, inlet, 1/8" MPT x 1/4" comp	502246
13	Fitting, outlet, 1/8" MPT x 3/8" comp	502262
14	Solenoid valve, water, 220 V, 60 Hz/230 V, 50 Hz	502926
15	Boot, dispense switch button (mounts on 501829 switch)	501841
Not shown	Tubing, water station, thermoplastic, 1/4" OD (sold by the foot)	502079
16	Splash panel	502789
Not shown	Retrofit ice and water chute kit	01028000

Electrical box (front view) — lever models

Reference	Description	Part #
1	Thermostat, bin level	500514
2	Level fill relay	501375
3	Switch, dispenser power	502209
4	Switch, ice machine bin signal	502209
5	Bin signal relay	501375
6	Level fill timer	501700

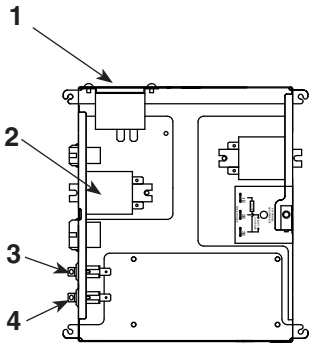

Dispense chute and splash panel areas (SensorSAFE) — Serial Number E08194 and above

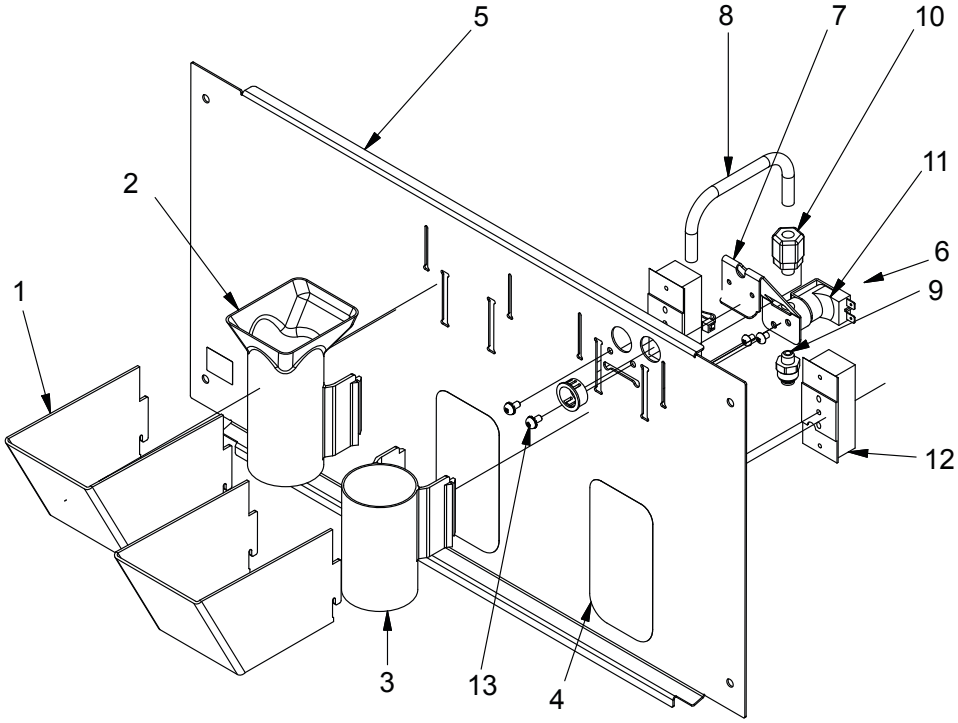

Reference	Description	Part #
1	Cover, dispense chute	502681
2	Chute, ice (with Agion® antimicrobial product protection[1])	01042787
3	Chute, water (with Agion)	01042795
4	Lens, sensor	502690
5	Splash panel (includes 2 of 502690)	01049162
6	Solenoid assembly, water, 220 V, 60 Hz/230 V, 50 Hz (includes solenoid valve, tube, bracket, inlet and outlet fittings)	01049139
7	Bracket, lever and water solenoid	01039635
8	Tube, water station	502356
9	Fitting, inlet, 1/4" tube x 1/8 MNPT straight	00991232
10	Fitting, outlet, 1/8" MPT x 3/8" comp	502246
11	Solenoid valve, water, 220 V, 60 Hz/230 V, 50 Hz	502926
12	Sensor (includes lens and ty-rap)	00122978
13	Fastener, 10-32 x 3/8" stainless steel	00982421
Not shown	Splash panel, SensorSAFE, complete assembly	01049105

[1] Disclaimer: Antimicrobial protection is limited to the treated components and does not treat water or ice.

Agion is a registered trademark of Agion Technologies, Inc, Wakefield, MA, USA.

Dispense chute and splash panel areas (SensorSAFE) — Serial Numbers below E08193

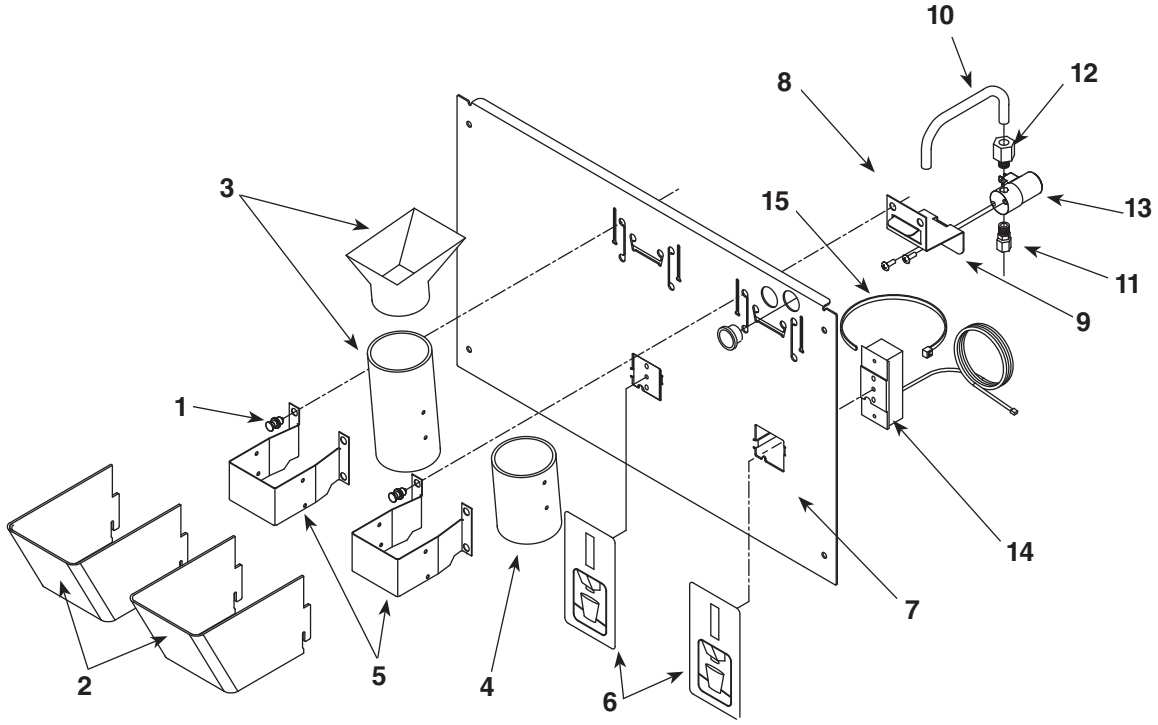

Reference	Description	Part #
1	Fastener, dispense chute bracket	502057
2	Cover, dispense chute (includes labels)	502681
3	Chute and funnel, ice	502248
4	Chute, water	502249
5	Bracket, chute (includes fasteners 502057)	502247
6	Lens, sensor	502690
7	Splash panel (includes 2 of 502690)	502710
8	Solenoid assy, water, 220 V, 60 Hz/230 V, 50 Hz (incl. 502926, 502356, 502246, 502355, 502262)	502927
9	Bracket, water solenoid and lever	502355
10	Tube, water station	502356
11	Fitting, inlet, 1/8" MPT x 1/4" comp	502246
12	Fitting, outlet, 1/8" MPT x 3/8" comp	502262
13	Solenoid valve, water, 220 V, 60 Hz/230 V, 50 Hz	502926
14	Sensor (includes 502690 and 203611)	00122978
15	Ty-rap, sensor mounting	203611
Not shown	Retrofit ice and water chute kit	01028000

Electrical box (front view) SensorSAFE models

Reference	Description	Part #
1	Thermostat, bin level	500514
2	Level fill relay	501375
3	Switch, dispenser power	502209
4	Switch, ice machine bin signal	502209
5	Bin signal relay	501375
6	Level fill timer	501700
7	SensorSAFE Board	502915

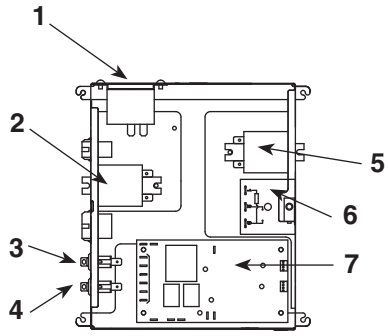

Wheel motor and drive system

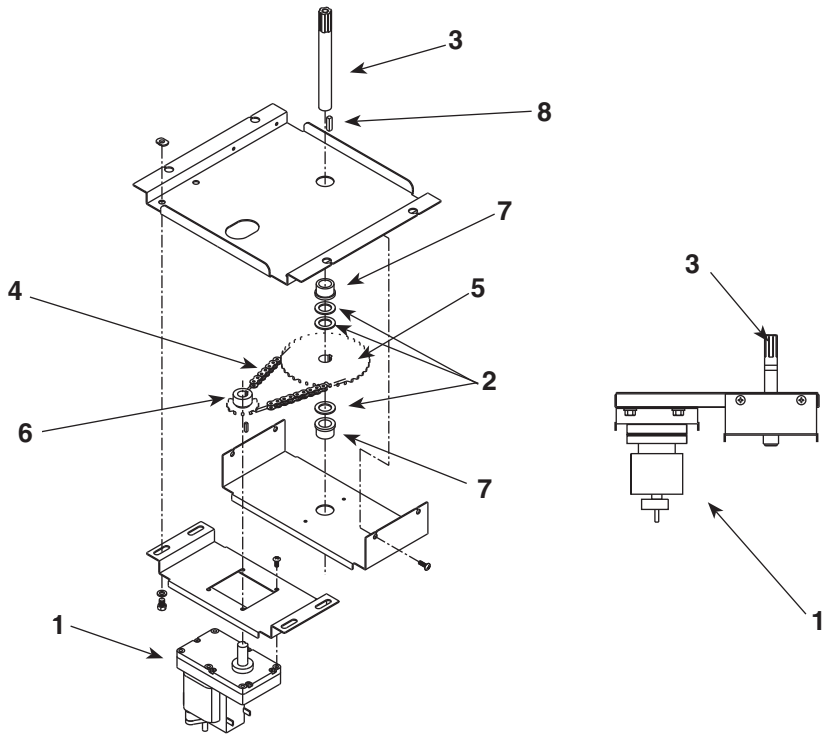

Reference	Description	Part #
1	Wheel motor, 220 V, 60 Hz/230 V, 50 Hz	501699
2	Washer, thrust	501026
Not shown	Fan blade, wheel motor	501607
3	Drive shaft (includes threaded rod and nut, see #6, page 26)	501619
4	Chain, 54 link	502691
5	Sprocket, drive shaft, 35 teeth	502692
6	Sprocket, wheel motor, 10 teeth	501019
7	Bearing, drive shaft	501024
Not shown	Connecting link, chain	500799
8	Key, driveshaft	500637
Includes all above	Dispenser drive assembly	502929

Hopper components

Top view – top mounted unit

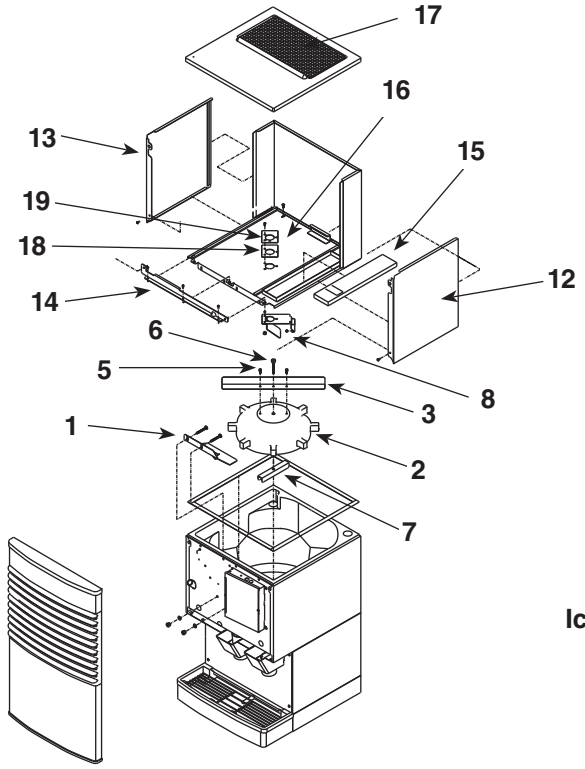

Top view – freestanding and RIDE units

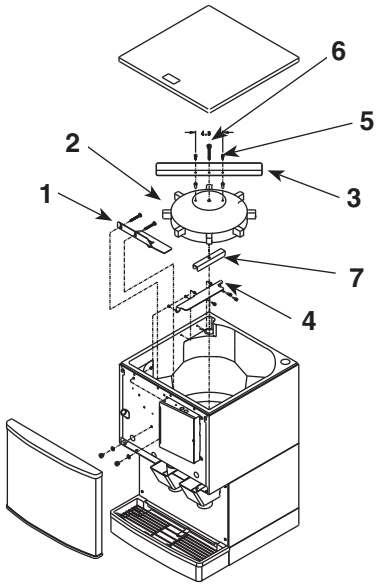

Ice tube bracket – side view – freestanding & RIDE units

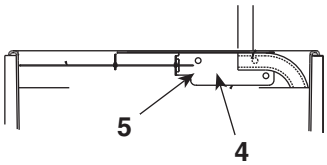

Ice tube bracket – side view – all top mounted units

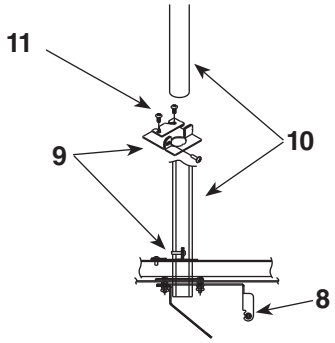

Dispense wheel – bottom view all units

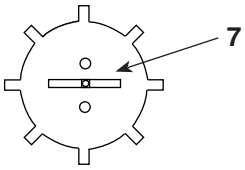

Reference	Description	Part #
1	Baffle, ice	501802
2	Wheel, dispense (includes drive bar, rotating agitator, threaded bar & rod)	501493
3	Agitator, rotating	501494
4	Bracket, ice tube	502712
5	Screw	501100
6	Rod, threaded (includes knurled nut)	501612
7	Drive bar assembly (includes threaded rod and nut)	501617
8	Ice deflector/cap tube bracket (units with top mounted ice machine)	501616
9	Bracket, ice tube entry (units with top mounted ice machine)	502698
10	Ice transport tube assembly (units with top mounted ice machines)	502697
11	Screws, knurled	501613
12	Side panel, RH	502723
13	Side panel, LH	502722
14	Bracket, ice machine hold-down	502714
15	Cover, hopper access	501717
16	Cover, hopper	502708
17	Lid, Ice machine, 110CT	502709
18	Gasket, ice entry	502824
Not shown	Drain pan, hopper	00115196

Ice transport tubing

Reference	Description	Part #
Not shown	Ice transport tube (RIDE units) – 3.1m (10 ft)	502522
Not shown	Ice transport tube (RIDE units) – 6.1m (20 ft)	502523
Not shown	Ice transport tube insulation (RIDE units only) – sold by the foot	501176
Not shown	Ice transport tube assembly (110 freestanding units)	502327
Not shown	Ice transport tube assembly (110 top mount units)	502697

Chilled water components

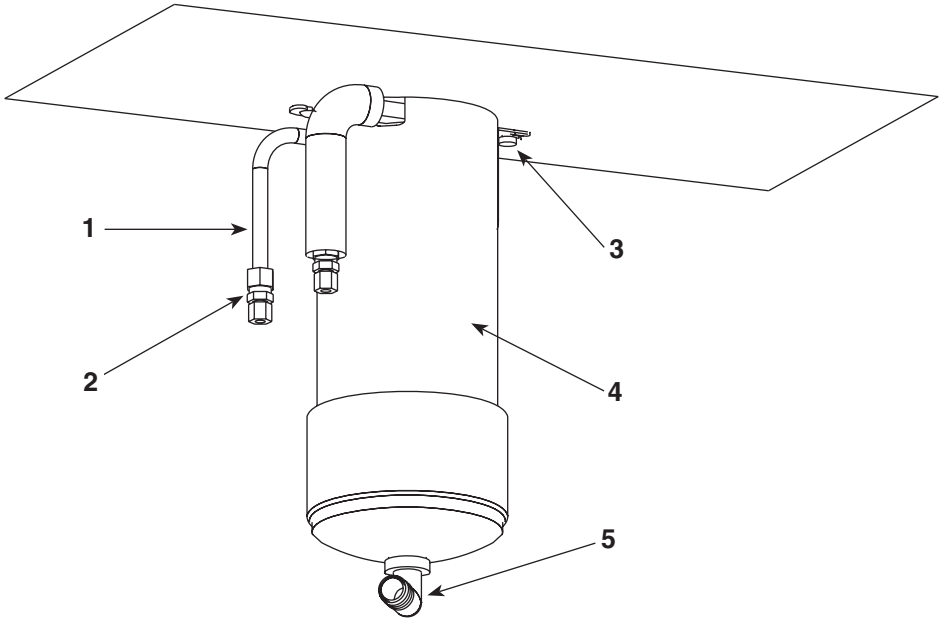

Reference	Description	Part #
1	Coil, chilled water (includes two 502599)	502598
2	Fitting, water coil	502599
3	Brackets, chilled water canister, pair (includes screws)	502600
4	Canister, chilled water (includes 502600 and 502605)	502601
5	Elbow, drain	502605
Parts 1-5 above	Assembly, chilled water	502602
Not shown	Tee, drain line	502604

Solenoid dispense assembly

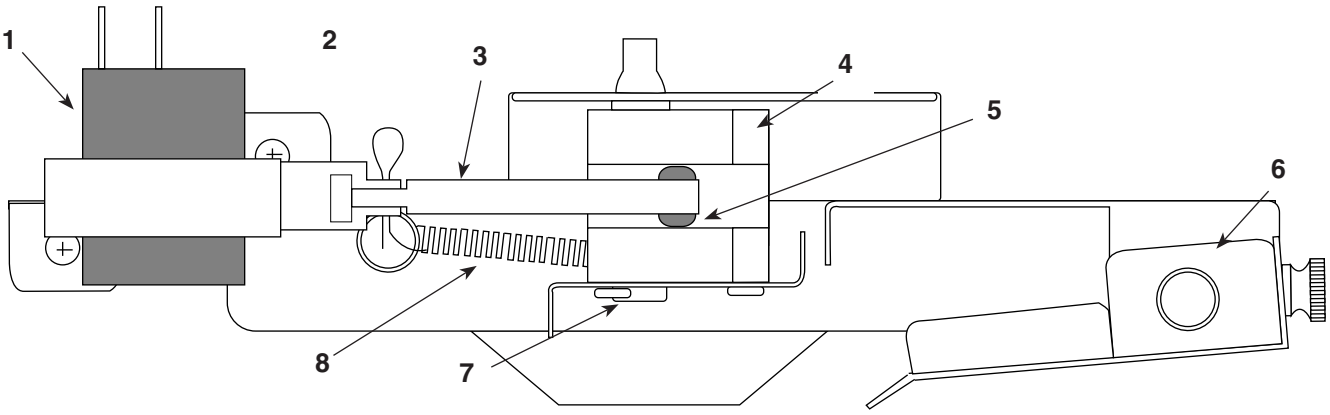

Reference #	Description	Part #
1	Solenoid, dispense, 220 V, 60 Hz/230 V, 50 Hz	501844
2	Cotter pin	502040
3	Linkage, solenoid (includes 502054 grommet)	502039
4	Block, dispense gate	502042
5	Grommet	502054
6	Splash pan, gate assembly	502045
7	Shoulder screw and washer	502038
8	Spring, gate assembly	501824
Parts 1-8 above	Gate assembly, 220 V, 60 Hz/230 V, 50 Hz	00128157

Water treatment accessories for Symphony ice and water dispensers

Reference #	Description	Part #
Standard capacity filter system		
Not shown	Follett QC4-FL4S water filter system (includes FL4S primary cartridge and head, coarse pre-filter and head, pressure gauge, flushing valve; assembled and installed on mounting bracket), one per ice machine	00130229
Not shown	Follett FL4S primary replacement cartridge	00130245
Not shown	Water filter cartridge – primary, carton of 6	00954297
Not shown	Everpure coarse pre-filter cartridge	00130211
Not shown	Water pre-filter cartridge – pre-filter, carton of 12	00954305
High capacity filter system		
Not shown	High capacity water filter system (one per ice machine)	00978957
Not shown	High capacity water filter cartridge – primary, single	00978965
Not shown	High capacity water filter cartridge – primary, carton of 6	00978973
Not shown	Water pre-filter cartridge – pre-filter, single	00130211
Not shown	Water pre-filter cartridge – pre-filter, carton of 12	00954305
Carbonless high capacity filter system		
Not shown	Carbonless high capacity water filter system (one per ice machine) – Horizon and Maestro series ice machines	01050442
Not shown	Carbonless high capacity water filter cartridge – primary, single	01050426
Not shown	Carbonless high capacity water filter cartridge – primary, carton of 6	01050434
Not shown	Water pre-filter cartridge – pre-filter, single	00130211
Not shown	Water pre-filter cartridge – pre-filter, carton of 12	00954305
Other filtration		
Not shown	Claris hardness removal filtration system	00986059
Not shown	Replacement filter for Claris system	00985127
Not shown	Reverse osmosis system, 200 gallons per day	00986034
Not shown	Replacement reverse osmosis cartridge	00985085
Not shown	Replacement reverse osmosis pre-filter	00985077
Not shown	Cleaning plug for reverse osmosis system	00985119
Not shown	Cleaning cartridge for reverse osmosis system	00985101
Water pressure		
Not shown	Water pressure regulator (25 psi)	501781

SafeCLEAN, SensorSAFE and Symphony are trademarks of Follett Corporation.
Follett and RIDE are registered trademarks of Follett Corporation, registered in the US.

FOLLETT®
Innovative solutions, inspired by ice

801 Church Lane • Easton, PA 18044, USA
Toll free (877) 612-5086 • +1 (610) 252-7301
www.follettice.com

00109520R06
© Follett Corporation 2/14