REF 20/25 – LB
REF 20/25 – PH
REF 20/25 – BB

Order parts online
www.follettice.com

Installation, Operation and Service Manual

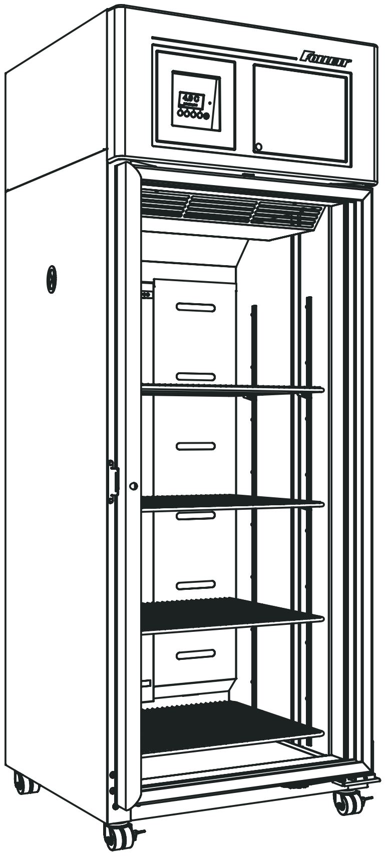

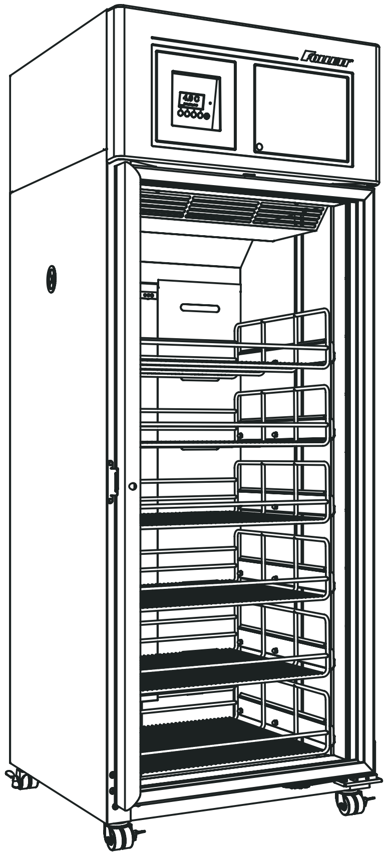

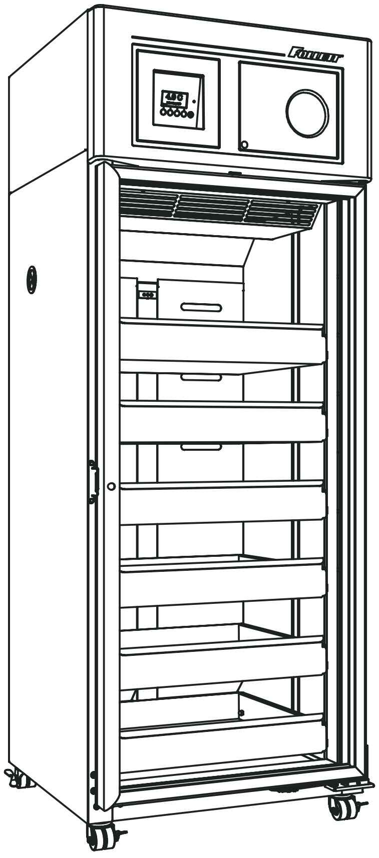

Following installation, please forward this manual to the appropriate operations person.

FOLLETT®
Innovative solutions, inspired by ice

801 Church Lane • Easton, PA 18040, USA
Toll free (877) 612-5086 • +1 (610) 252-7301
www.follettice.com

00926170R09

Contents

Welcome to Follett 3
Before you begin 3
Ambients 4
Clearances 4
Electrical specifications 4
Refrigeration specifications 4
Detail drawing 4
Installation 5
Adjust self-closing door (if necessary) 5
Install shelves (if equipped) and power up 5
Fill product bottle 6
Remote alarm connections (if desired) 7
  Dry contacts 7
  RS-485 port 7
Operation 8
Quick setup checklist 8
Interior LED lights 8
Set time & date 8
Change temperature display to show degrees Fahrenheit (if desired) 9
High and low alarm setup 10
Alarms 12
Alarm muting 12
Alarm volume selection 13
Alarm silence 13
Password PIN security (default is 3843) 14
To turn password on/off 14
To make a new password PIN 15
Min/max temperature logging 16
Probe calibration 17
Chart recorder set up (if so equipped) 18
Chart recorder calibration 18
Changing the chart paper 18
Replacing the pen 18
Removing drawers 19
Removing slides 19
Cleaning 20
Interior cleaning 20
Exterior cleaning 20
Annual cleaning 21
Service 22
Refrigeration system 22
Defrosting 22
Controller operation 23
Temperature sensor readings 23
Heated door (option) – changing cycle 24
Controller hot key 27
Hot key upload 27
Hot key download 28
Troubleshooting 34
Before calling for service 34
Appendix 35
Control key functions 35
Menu Navigation table 35
Replacement parts 36
Unit cooler 36
Cabinet 37
Facade 38
Door assembly 39

Welcome to Follett

Follett equipment enjoys a well-deserved reputation for excellent performance, long-term reliability and outstanding after-the-sale support. To ensure that this product delivers that same degree of service, we ask that you take a moment to review this manual before beginning the installation. Should you have any questions or require technical help at any point, please call our technical service group at (877) 612-5086 or +1 (610) 252-7301.

Before you begin

After uncrating and removing all packing material, inspect the equipment for concealed shipping damage. If damage is found, notify the shipper immediately and contact Follett Corporation so that we can help in the filing of a claim, if necessary.

Check your paperwork to determine which configuration you have. Follett configuration numbers are designed to provide information about the type of refrigerator you are receiving. Following is an explanation of the different item numbers.

Model
Cubic foot capacity – **20, 25**
Configuration – **LB** (Laboratory - shelves), **PH** (Pharmacy - baskets), **BB** (Blood bank - drawers)
Door hinge – **R** (Right hand), **L** (Left hand)
Door heater option – **00** (No door heater), **HT** (door heater)
Chart recorder option – **00** (No chart recorder), **CR** (Chart recorder)

REF	20	LB	R	00	00

Specifications

	REF20-LB	REF25-LB	REF20-PH	REF25-PH	REF20-BB	REF25-BB
Capacity	19.7 cu ft (558 L)	24.6 cu ft (697 L)	19.7 cu ft (558 L)	24.6 cu ft (697 L)	19.7 cu ft (558 L)/ 280 bags (450ml)	24.6 cu ft (697 L)/ 360 bags (450ml)
Storage system	(4) epoxy-coated shelves	(4) epoxy-coated shelves	(6) epoxy-coated baskets	(6) epoxy-coated baskets	(6) stainless steel drawers	(6) stainless steel drawers
Exterior width	29.75" (76 cm)	29.75" (76 cm)	29.75" (76 cm)	29.75" (76 cm)	29.75" (76 cm)	29.75" (76 cm)
Exterior depth	29" (74 cm)	35" (89 cm)	29" (74 cm)	35" (89 cm)	29" (74 cm)	35" (89 cm)
Exterior depth with handles	30.5" (78 cm)	36.5" (93 cm)	30.5" (78 cm)	36.5" (93 cm)	30.5" (78 cm)	36.5" (93 cm)
Exterior height with casters	79.5" (202 cm)	79.5" (202 cm)	79.5" (202 cm)	79.5" (202 cm)	79.5" (202 cm)	79.5" (202 cm)
Interior dimensions (w x h x d)	24" x 22.5" x 56" (61 cm x 58 cm x 143 cm)	24" x 28.5" x 56" (61 cm x 73 cm x 143 cm)	24" x 22.5" x 56" (61 cm x 58 cm x 143 cm)	24" x 28.5" x 56" (61 cm x 73 cm x 143 cm)	24" x 22.5" x 56" (61 cm x 58 cm x 143 cm)	24" x 28.5" x 56" (61 cm x 73 cm x 143 cm)
Crated weight	395 (180 kg)	430 (196 kg)	450 (205 kg)	485 (220 kg)	475 (216 kg)	525 (239 kg)
Max. heat rejection	950 BTU/hr	1050 BTU/hr	950 BTU/hr	1050 BTU/hr	950 BTU/hr	1050 BTU/hr

Standard features – all models	
Door	Dual pane, low-E glass, condensation free to 80 F (27 C) air/60% RH
Door handle	ADA-compliant, full length handle with integral lock
Interior/exterior material	Heavy-duty, corrosion resistant stainless steel
Casters	(4) dual-wheel swiveling casters with toe locks
Insulation	2.75" (7 cm) thick, CFC-free foam insulation throughout
Lighting	(2) full length side LED lights
Air circulation system	Ducted air through 12 back plenum openings with front face return
Temperature probe	Stainless steel RTD (resistance temperature detectors) top, bottom probe standard on - BB models, available as option on -LB, -PH models, immersible with panel quick-disconnect

Ambients

Intended for indoor use where ambient temperature typically does not exceed 80 F (27 C) and ambient relative humidity does not exceed 60% RH. A heated door is recommended for higher humidity ambients.

Clearances

The top of the refrigerator must have 10 inches (25.4 cm) of clear space above the refrigerator to ensure proper ventilation of the refrigeration system.

The back of the refrigerator should have 1 inch (2.5 cm) of clearance to allow for power cord clearance on unit and an additional 1 inch (2.5 cm) if the unit is to be plugged in directly behind the refrigerator.

Electrical specifications

115V, 60Hz, 1 phase

Running load amps: 8.4 amps without heated door; max 9.7 amps with door heater energized 100% (adjustable).

Full load amps (90% maximum continuous current per UL 471 at 40 C): 10.5 amps

Minimum circuit ampacity: 15 amp dedicated circuit

Maximum size of branch circuit overcurrent device: 15 amp dedicated circuit

Refrigeration specifications

Refrigerant R134a, 11.4 oz (322g)

Detail drawing

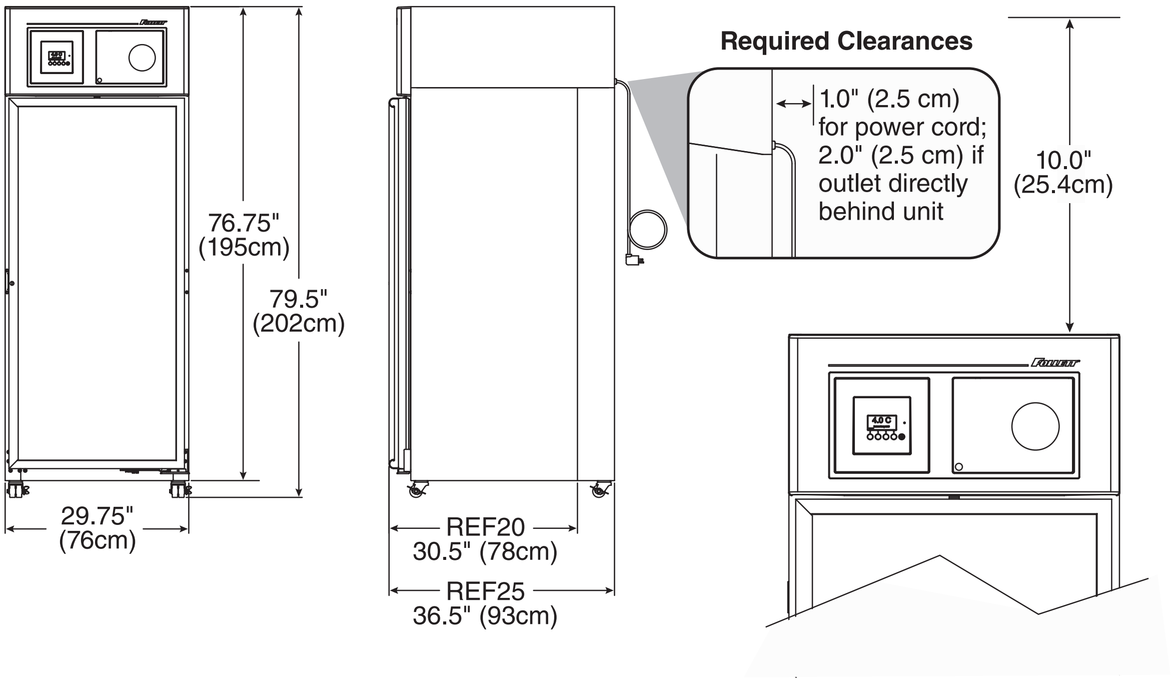

Installation

⚠ DANGER

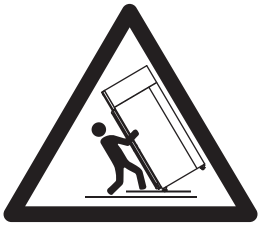

- **Do not tilt any unit further than 30° off vertical during uncrating or installation**
- **Refrigeration module area contains mechanical, moving parts. Keep hands and arms clear of this area at all times. If access to this area is required, power to unit must be disconnected first.**

1. Remove key taped to side of refrigerator cabinet and unlock door.
2. Remove casters from box packed inside refrigerator.

   Note: California facilities requiring wall and floor anchors – refer to wall anchor kit instructions (#00938241) packed with seismic kit before proceeding with caster installation.
3. Unbolt refrigerator from pallet.
4. Rotate refrigerator on pallet to install casters (Fig. 1.1).
5. Install casters by hand one at a time using channel locks to tighten, until caster meets against the bottom of cabinet (Fig. 1.2).
6. Peel protective film from exterior walls of stainless cabinet.

Fig. 1

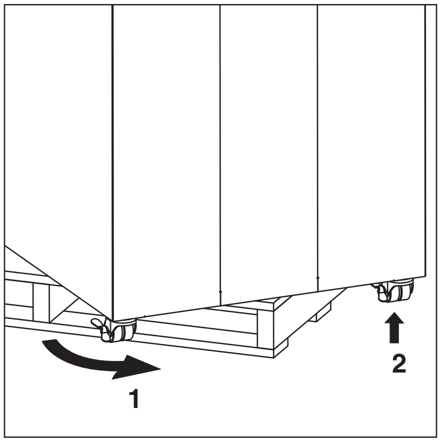

Adjust self-closing door

1. Roll refrigerator to desired location and lock as many casters as possible (Fig 2.1).
2. If the door appears to be sagging, remove the philips screw (Fig. 2.2) holding the Hold Open Bracket to the Hinge Bracket to gain access to the Sag Adjustment Screw (Fig. 2.3). Turn the Sag Adjustment Screw to align the door squarely with the freezer cabinet. When finished, reinstall the Hold Open Bracket.
3. Check door for closing tension and adjust if necessary. To check closing tension, open door 1" and turn screw (Fig. 2.4) counterclockwise until you achieve positive close. (Light will go out) Then, turn another half turn counterclockwise.

Fig. 2

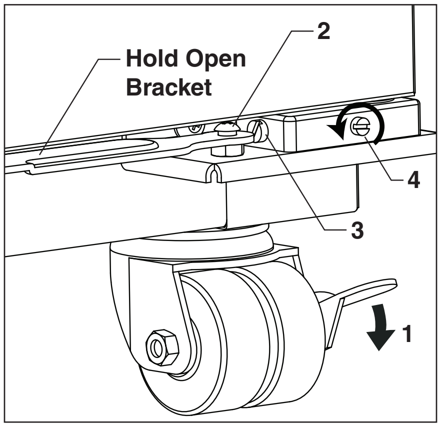

Install shelves (if equipped) and power up

1. If refrigerator is equipped with shelves, remove bag containing shelf supports and position them in desired locations on each pilaster and insert shelves (Fig. 3).
2. Plug refrigerator into a 115V 60Hz 15 amp dedicated outlet.

Fig. 3

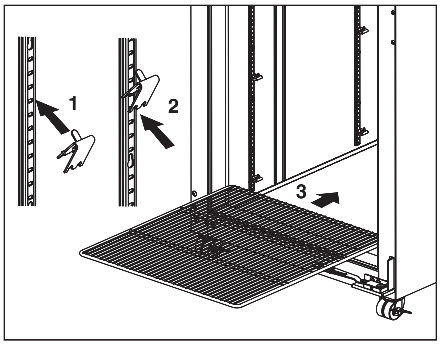

Fill product bottle

1. Remove probe and cap from the top bottle and fill with solution used at your facility (e.g., 50% glycerine and 50% water) (Fig. 4). Replace cap and reinsert probe sensor.
2. If equipped with a bottom probe, perform same procedure for bottom bottle.

ATTENTION INSTALLER
It is imperative that the top probe bottle be filled with a solution that your facility uses to ensure proper operation of unit.

3. Adhere supplied probe wire clips (x4, packaged with manual) to inside wall leading to the probe bottle.
4. Route probe wire into clips and close the clips.

5. Press lower left corner of front facade door to access power switch inside (Fig. 5.1).

6. Press power switch to turn unit on (Fig. 6.1).
7. Install (2) 9V back-up interface batteries (Fig. 6.2) and (1) 9V chart recorder back-up battery (if equipped.)

Fig. 4

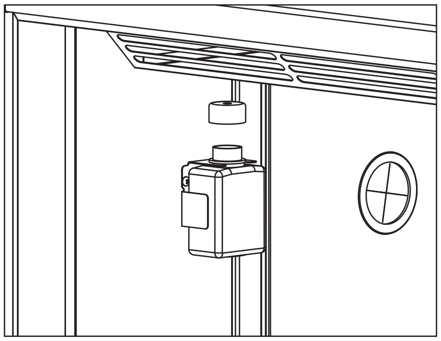

Fig. 5

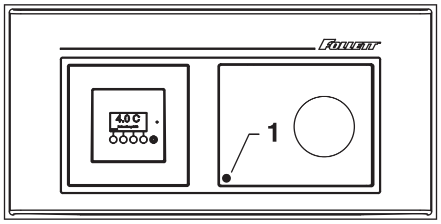

Fig. 6

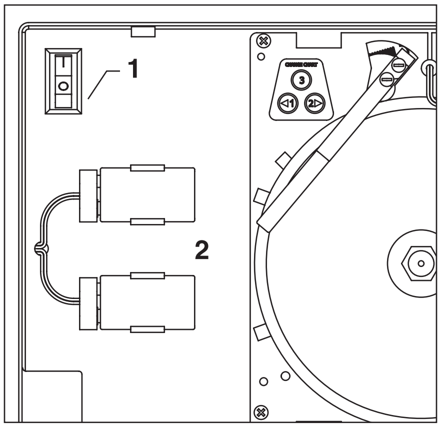

Remote alarm connections (if desired)

Remote communication connections are located on back side of top facade (Fig. 7).

Dry contacts

- Connection to NO or NC contacts provides remote alarming capability
- No temperature data is communicated

RS-485 port

- Connection provides real-time data streaming
  - – Temperature
  - – Alarms
  - – Refrigeration operation
- MODBUS protocol
- Uses 6 pin, 4 conductor RJ11 jack (not supplied)

Fig. 7

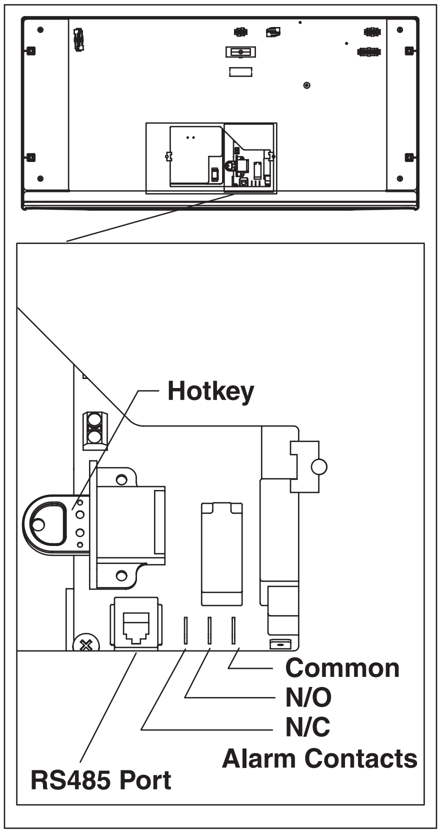

Operation

Quick setup checklist

- Set time/date
- Change temperature display from factory default Celsius to Fahrenheit (if desired)
- Set high/low temperature alarms
- Select password access (if required)
- Setup chart recorder (if equipped)
- Verify solution is in bottle

⚠ DANGER	
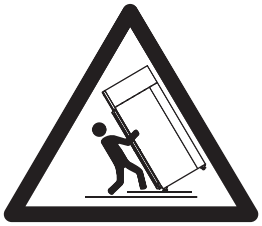	**• Do not extend all of the drawers or baskets when fully loaded to avoid the possibility of the refrigerator tipping forward** **• Refrigeration module area contains mechanical, moving parts. Keep hands and arms clear of this area at all times. If access to this area is required, power to unit must be disconnected first.**

Fig. 8

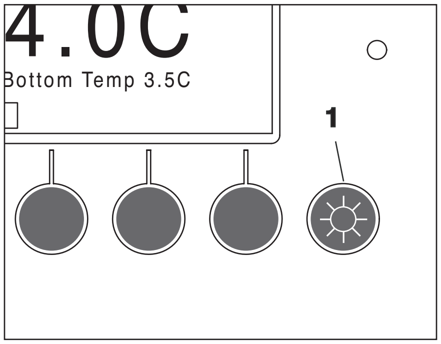

Interior LED lights

Interior lighting of refrigerator with door closed is controlled by light switch (Fig 8.1) on interface.

Lights will be on whenever door is open regardless of light switch selection.

ATTENTION
• The time/date are not retained in the event of a power interruption or if the batteries are dead. **• Change batteries with the unit powered up. Change one battery at a time to retain time/date. Failure to follow this procedure will result in loss of time & date and will not provide accurate time and date stamping for high or low temperature alarms.**

Fig. 9

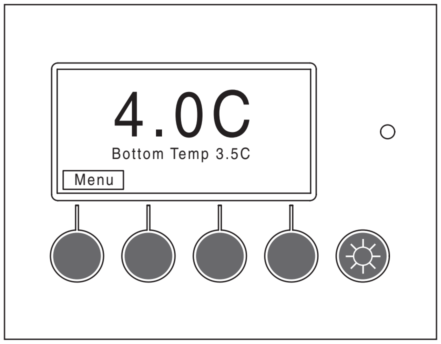

Set time & date

Set time and date for stamping of minimum and maximum temperatures.

1. Press **Menu** button (Fig. 9).

2. Use ▲/▼ to scroll and highlight **Set time/date** and press **Enter** to select (Fig. 10).

Fig. 10

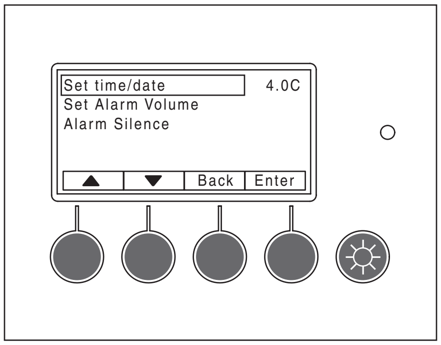
Set time/date
4.0C
Set Alarm Volume
Alarm Silence
▲
▼
Back
Enter

Fig. 11

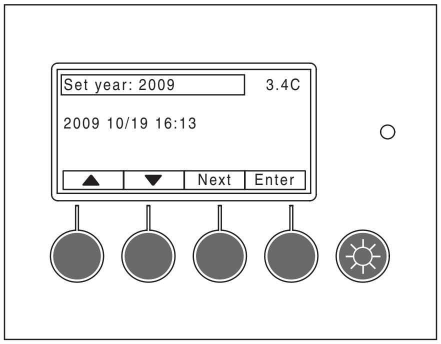
Set year: 2009
3.4C
2009 10/19 16:13
▲
▼
Next
Enter

3. Adjust the year using ▲/▼ and press NEXT.
4. Adjust the month using ▲/▼ and press NEXT.
5. Adjust the day using ▲/▼ and press NEXT.
6. Adjust the hour using ▲/▼ and press NEXT. (24 HR Clock)
7. Adjust the minute using ▲/▼.
8. Press **Enter** to select values.
9. Press **Back** until the main temperature display screen is displayed.

Change temperature display to show degrees Fahrenheit (if desired)

Follett has pre-set the temperature display to read in degrees Celsius. If degrees Fahrenheit display is preferred:

1. Press **Menu** button (Fig. 12).

Fig. 12

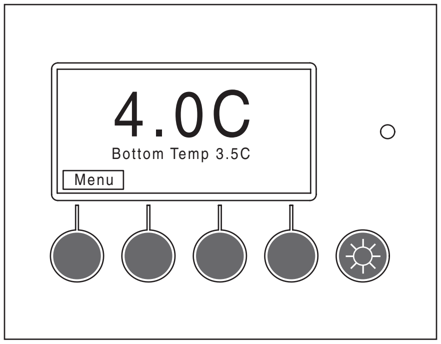
4.0C
Bottom Temp 3.5C
Menu

Fig. 13

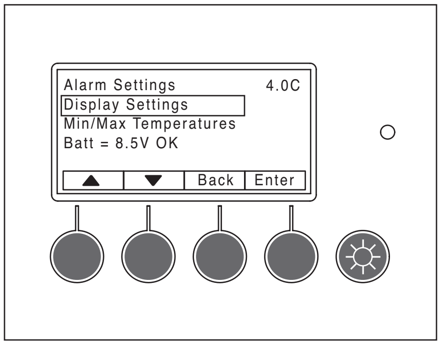
Alarm Settings
4.0C
Display Settings
Min/Max Temperatures
Batt = 8.5V OK
▲
▼
Back
Enter

2. Use ▲/▼ to scroll and highlight **Display Settings** and press **Enter** to select (Fig. 13).
3. Use ▲/▼ to scroll and highlight **Degrees F/C** and press **Enter** to select.
4. Use ▲/▼ to scroll and highlight **F** and press **Enter** to select.
5. Press **Back** button until the main temperature display screen is displayed. Temperature is displayed in degrees F.

High and low alarm setup

The high alarm is set to a default of 40 C (104 F) from the factory. This default setting is used so that the alarm will not sound while the unit is pulling down to temperature. The low alarm default setting is 1.0 C (33.8 F).

After the unit has been installed and the system has stabilized (approximately 1 hr), the high and low alarm set points should be adjusted to desired settings.

1. Press **Menu** button (Fig. 14).

Fig. 14

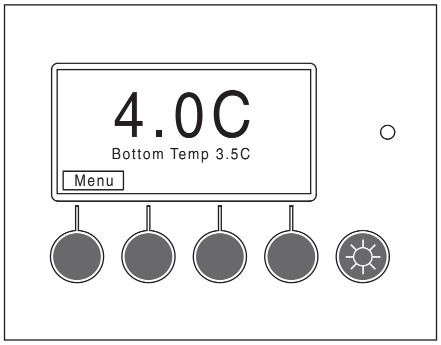
4.0C
Bottom Temp 3.5C
Menu

2. **Alarm Settings** will be highlighted. Press **Enter** to select (Fig. 15).

Fig. 15

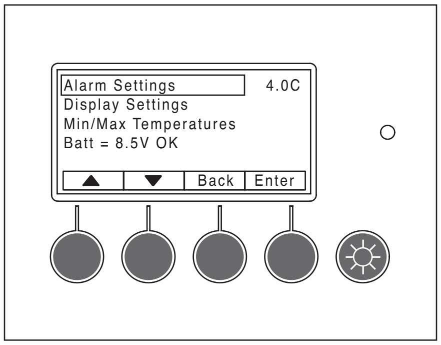
Alarm Settings
4.0C
Display Settings
Min/Max Temperatures
Batt = 8.5V OK
▲
▼
Back
Enter

3. Use ▲/▼ to scroll and highlight **High Alarm Set** and press **Enter** to select (Fig. 16).

Fig. 16

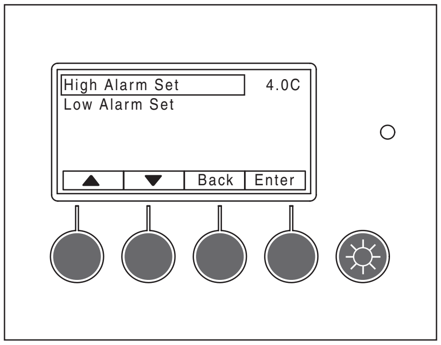
High Alarm Set
4.0C
Low Alarm Set
▲
▼
Back
Enter

4. Use ▲/▼ to change set point and press Enter to accept (Fig. 17).

Fig. 17

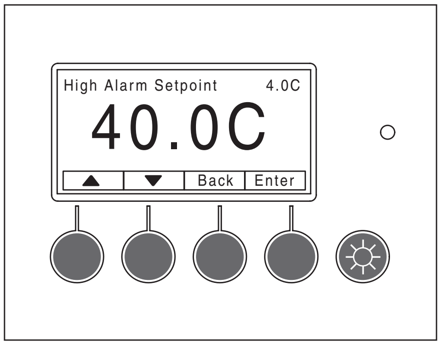
High Alarm Setpoint
4.0C
40.0C
▲
▼
Back
Enter

5. Use ▲/▼ to scroll and highlight **Low Alarm Set** and press **Enter** to select (Fig. 18).

Fig. 18

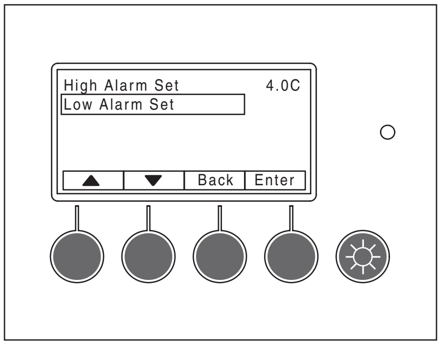
High Alarm Set
4.0C
Low Alarm Set
▲
▼
Back
Enter

6. Use ▲/▼ to change set point and press Enter to accept (Fig. 19).
7. Press **Back** until the main temperature display screen is displayed.

Fig. 19

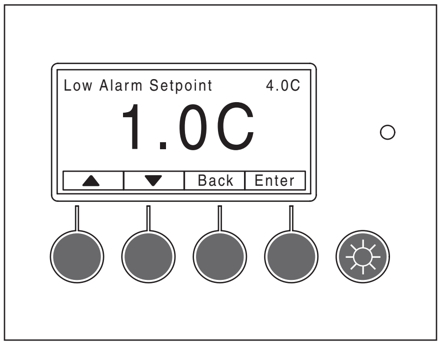
Low Alarm Setpoint
4.0C
1.0C
▲
▼
Back
Enter

Alarms

The refrigerator has several alarms that will sound an audible and visual alarm. Alarm type is shown on the top line of the alarm display and multiple alarms will show progressively on the display. A red LED, to the right of the display, accompanies all alarms.

All active alarms are conveyed to remote alarm relays. Remote alarm relay provides a choice of either a normally closed (NC) or normally open (NO) contact. It is recommended for use at 24V 1A (relay is rated for 250V 10A).

Alarm displayed	Conditions
Temp Alarm	Only top product temperature probe activates this alarm. Bottom product temperature probe, if installed, is for display reference only.
Top Probe Error	Activates with loss of signal from top probe (open or short circuit).
Bottom Probe Error	Activates with loss of signal from bottom probe (open or short circuit).
Door Ajar Alarm	Activates with door open longer than 1 minute.
AC Power Alarm	Activates after 2 min delay with loss of AC power. Display backlight will turn off to conserve battery life, but pressing any button will brighten display for 30 seconds.
Low Battery Alarms	Display activates when (2) 9V controller back-up batteries decrease to 7.5V (maximum 4 hr back-up time remaining.) This alarm will audibly chirp every 5 minutes. Chart recorder – LED flashes green. **All batteries should be changed at same time. Replace batteries one at a time with AC power on to keep correct time/date.**
Evap Probe Error	Activates with loss of signal from refrigeration control evaporator probe (open or short circuit). Refrigerator goes into a fixed on/off cycle until corrected. Default settings are 4 minutes compressor on time and 8 minutes compressor off time. Cycle on time and off time are adjustable in faulty probe cycle sub-menu of refrigeration controls menu.

Alarm muting

All audible alarms can be muted for up to 60 minutes in 5 minute increments by pressing the **MUTE** button. The desired mute period will display, and count down, in the window adjacent the MUTE label (Fig. 20).

Fig. 20

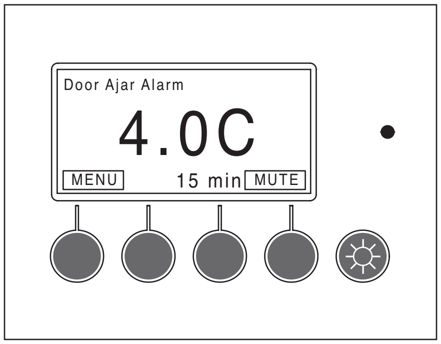

Alarm volume selection

Factory default setting is "high." To change volume of the alarm:

1. Press **Menu** button (Fig. 21).
2. Use ▲/▼ to scroll and highlight **Set Alarm Volume** and press **Enter** to select (Fig. 22).
3. Use ▲/▼ to select the volume (high/medium/low) and press **Enter** to select (Fig. 23).
4. Press **Back** until the main temperature display screen is displayed.

Fig. 21

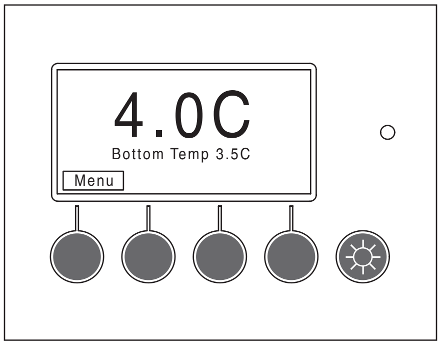
4.0C
Bottom Temp 3.5C
Menu

Fig. 22

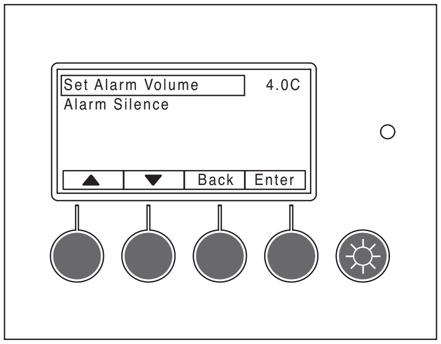
Set Alarm Volume
4.0C
Alarm Silence
▲
▼
Back
Enter

Fig. 23

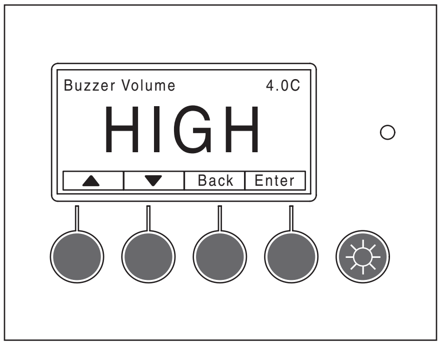
Buzzer Volume
4.0C
HIGH
▲
▼
Back
Enter

Alarm silence

Audible alarming can be turned off through the menu interface:

1. Press **Menu** button (Fig. 24).

Fig. 24

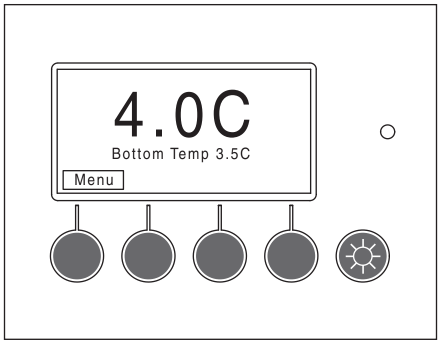
4.0C
Bottom Temp 3.5C
Menu

2. Use ▲/▼ to scroll and highlight **Alarm Silence** and press **Enter** to select (Fig. 25).

Fig. 25

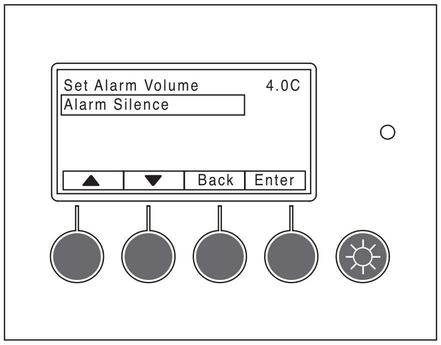
Set Alarm Volume
4.0C
Alarm Silence
▲
▼
Back
Enter

3. Use ▲/▼ to select **ON** or **OFF** and press **Enter** to select (Fig. 26).
4. Press **Back** until main temperature display screen is displayed.

Fig. 26

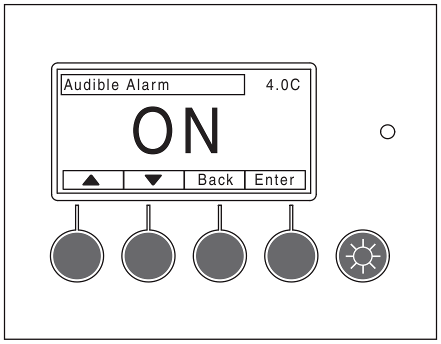
Audible Alarm
4.0C
ON
▲
▼
Back
Enter

Password PIN security (default is 3843)

If desired, access to the user selectable features and settings can be controlled by a password PIN. The refrigerator ships with the password option turned off. The default password PIN, if the password is turned on, is 3843. This password pin number will always work.

To turn password on/off

1. Press **Menu** button (Fig. 27).

Fig. 27

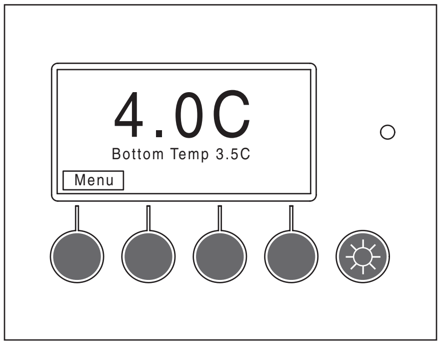
4.0C
Bottom Temp 3.5C
Menu

2. Use ▲/▼ to scroll and highlight **Password on/off** option and press **Enter** to select (Fig. 28).

Fig. 28

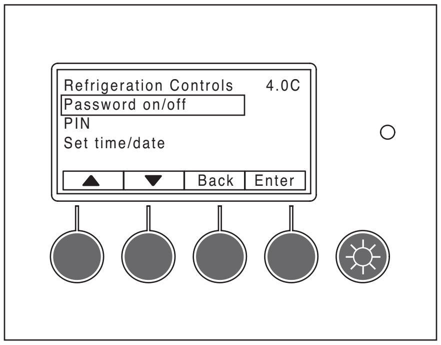
Refrigeration Controls
4.0C
Password on/off
PIN
Set time/date
▲
▼
Back
Enter

Fig. 29

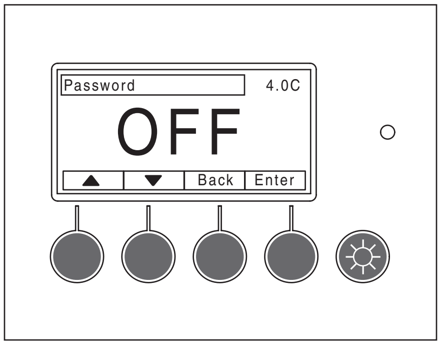
Password
4.0C
OFF
▲
▼
Back
Enter

3. Use ▲/▼ to choose **ON** or **OFF** and press **Enter** to select (Fig. 29).
4. Press **Back** until the main temperature display screen is displayed.

To make a new password PIN

1. Press **Menu** button (Fig. 30).

Fig. 30

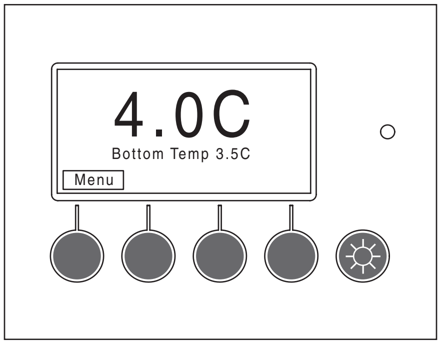
4.0C
Bottom Temp 3.5C
Menu

2. Use ▲/▼ to scroll and highlight **PIN** and press **Enter** to select (Fig. 31).

Fig. 31

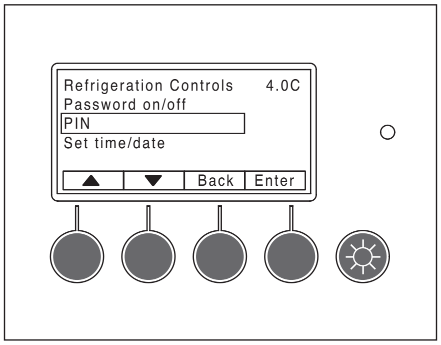
Refrigeration Controls
4.0C
Password on/off
PIN
Set time/date
▲
▼
Back
Enter

3. Use ▲/▼ to select the first number of the 4 digit pin. Use the **Next** button to move to the next digit, adjust with ▲/▼ and repeat for the last 2 digits. Press **Enter** to select (Fig. 32).
4. Press **Back** until the main temperature display screen is displayed.

Fig. 32

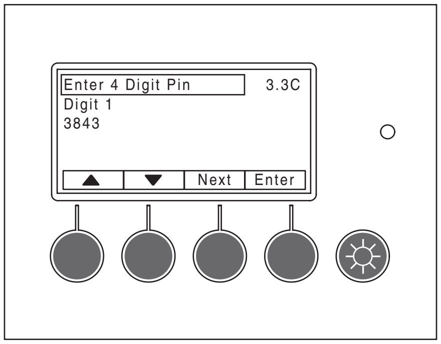
Enter 4 Digit Pin
3.3C
Digit 1
3843
▲
▼
Next
Enter

Min/max temperature logging

The controller retains maximum and minimum temperatures since last reset and provides a date and time stamp of when they occurred.

1. Press **Menu** button (Fig. 33).
2. Use ▲/▼ to scroll and highlight **Min/Max Temperatures** and press **Enter** to select (Fig. 34).
3. Use ▲/▼ to select the min or max logged temperature (Fig. 35). Press **Enter** to reset log.
4. Press **Back** until the main temperature display screen is displayed.

Fig. 33

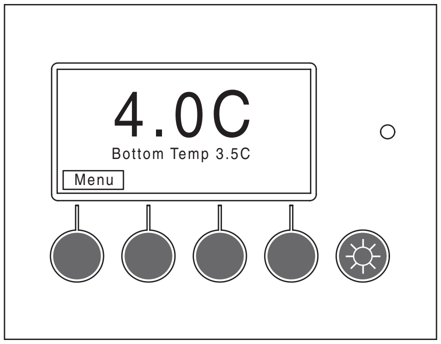
4.0C
Bottom Temp 3.5C
Menu

Fig. 34

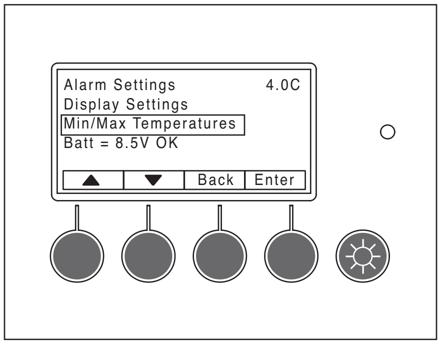
Alarm Settings
4.0C
Display Settings
Min/Max Temperatures
Batt = 8.5V OK
▲
▼
Back
Enter

Fig. 35

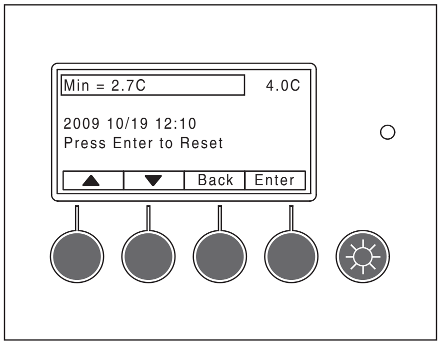
Min = 2.7C
4.0C
2009 10/19 12:10
Press Enter to Reset
▲
▼
Back
Enter

Probe calibration

Follett refrigerator probes are calibrated to a known standard prior to leaving the factory. Recalibration can be easily accomplished at any time, if desired:

1. Remove upper temperature probe from probe bottle and completely submerge into an ice bath.

   Note: Ice bath should be densely compacted ice (flake, crushed, nugget, or cracked) and a little water.

2. Place ice bath with probe in refrigerator and close door.
3. Press **Menu** button (Fig. 36).

Fig. 36

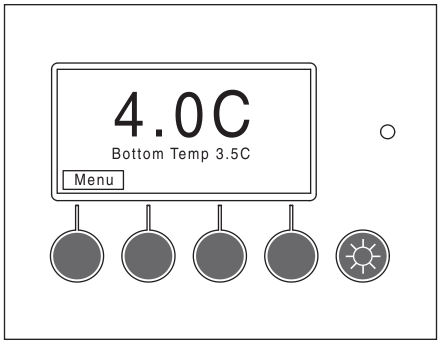
4.0C
Bottom Temp 3.5C
Menu

4. Use ▲/▼ to scroll and highlight **Refrigeration Controls**, press and hold **Enter** and ▼ together for 3 seconds (Fig. 37).

Fig. 37

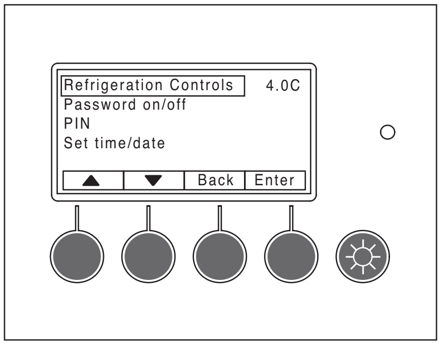
Refrigeration Controls
4.0C
Password on/off
PIN
Set time/date
▲
▼
Back
Enter

5. **Calibration** should be highlighted, press **Enter** to select (Fig. 38).

Fig. 38

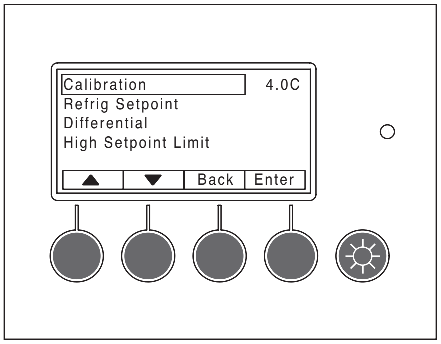
Calibration
4.0C
Refrig Setpoint
Differential
High Setpoint Limit
▲
▼
Back
Enter

6. **Cal Top Probe** should be highlighted, press **Enter** to select (Fig. 39).

Fig. 39

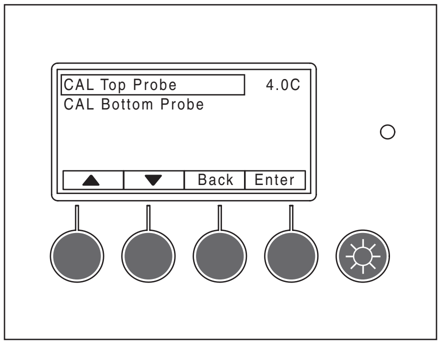
CAL Top Probe
4.0C
CAL Bottom Probe
▲
▼
Back
Enter

7. When probe temp stabilizes press **Enter** button calibrating it to 0.0 C (32 F) (Fig. 40). Wait one minute and press **Enter** button again to confirm calibration.
8. Remove probe from ice bath and return to solution-filled probe bottle.
9. Press **Back** until main temperature display screen is displayed.
10. Repeat steps for bottom probe, if equipped.

ATTENTION
• **Bottom temperature probe is only standard on blood bank models** • **If unit has the chart recorder option, refer to "Chart recorder calibration" on page 18.**

Fig. 40

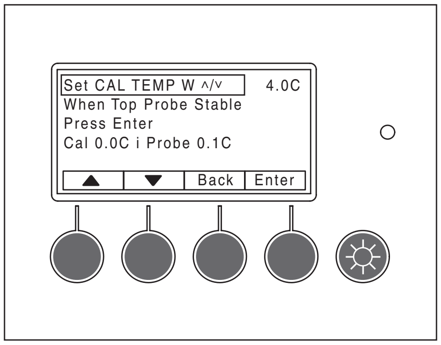
Set CAL TEMP W ^/v 4.0C
When Top Probe Stable
Press Enter
Cal 0.0C i Probe 0.1C

Chart recorder set up (if so equipped)

The chart recorder is mounted in the front right of the facade behind the door (Fig. 41). A package of 50 charts that record in C is included with your refrigerator. If you have changed your display to show temperatures in F, you will need different charts. Please call Follett at (877) 612-5086 or +1 (610) 523-9361 to order part number 00967729.

The chart recorder is powered by the controller and has its own battery back up. An LED provides battery status info: Steady green = battery okay, Flashing green = low battery or no power to the controller.

Chart recorder calibration

If desired, calibration should be done at the same time as probe calibration (page 17) by pressing either the left or right arrow keys to correspond with the calibrated product display temperature.

1. Press **Left #1** or **Right #2** arrow button (Fig. 41) for 5 seconds until pen begins to move.
2. Continue to press **#1** or **#2** button to move pen to record same temperature as probe.

Changing the chart paper

1. Press and hold **#3** button until pen begins to move off chart.
2. Once the pen moves completely off chart, unscrew knob (counter-clockwise) at center of chart.
3. Remove old chart and place new chart in position so that correct time coincides with time line groove on recorder.
4. Reinstall knob.
5. Press and hold **#3** button for approximately (1) one second until pen begins to move back onto chart.
6. Make sure pen is marking paper. If not, carefully adjust arm so that pen makes contact with paper.

Replacing the pen

1. To replace pen, press and hold the **#3** button until pen starts to move off chart.
2. Once pen has moved completely off chart, carefully lift pen up and unsnap the "U" clip part to remove pen from metal pen arm.
3. Position new pen on metal pen arm and snap "U" clip underneath pen around arm to secure.
4. Press and hold **#3** button for approximately (1) second until pen begins to move back onto chart.
5. Make sure pen is marking. If not, carefully adjust arm so that pen makes contact with paper.

Fig. 41

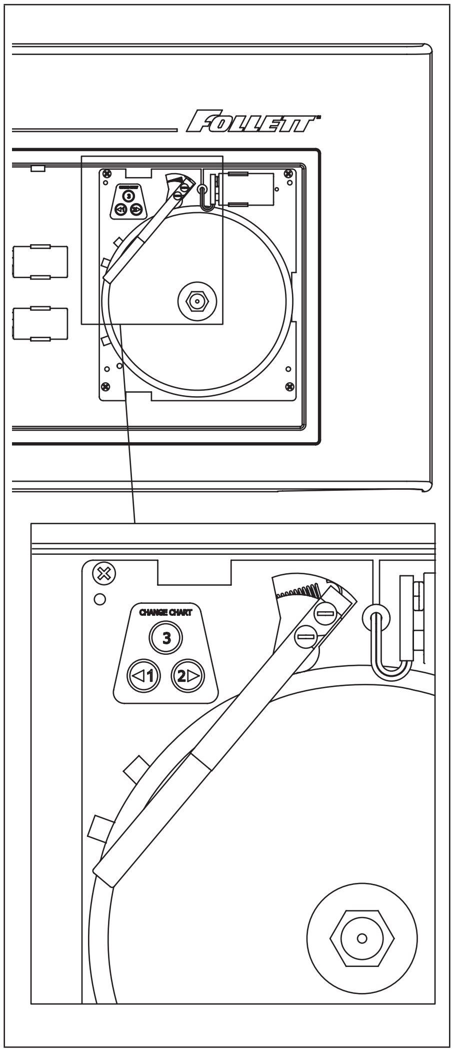

Removing drawers

1. Pull drawer forward to stop (Fig. 42.1).
2. Lift drawer front to free front rollers from slides (Fig. 42.2).
3. Still lifted, pull drawer forward to free back rollers from slides.

Fig. 42

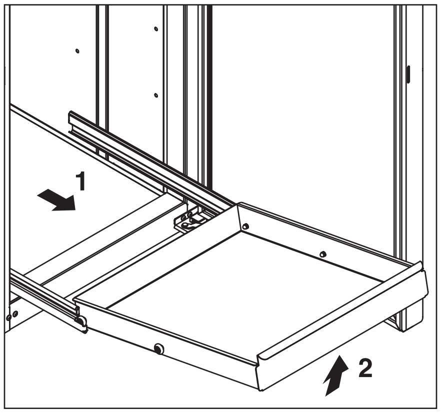

Removing slides

1. Push slides all the way back.
2. Swing bottom of slide away from refrigerator wall and lift slide off rollers.

Cleaning

Use non chlorine-based cleaners. Cleaners containing chlorine can cause staining and pitting of the stainless steel.

Disconnect power to unit by turning the power switch off, located on the upper front facade panel, and removing the power cord from the receptacle.

Interior cleaning

Using a sponge or soft cloth, clean unit with a non-abrasive, non-chlorinated, all-purpose detergent. Note: The left and right air plenums should be removed to clean them, as well as behind them (Fig. 43, 44). In addition the shelves, baskets, drawers and slides should be cleaned as well.

Exterior cleaning

Wipe stainless steel exterior with a soft cloth in the direction of grain as needed. Stainless steel polish may be used to enhance the finish of the unit. The glass door and exterior parts may be cleaned with a soft cloth, window cleaner or other non-abrasive cleaner.

Fig. 43

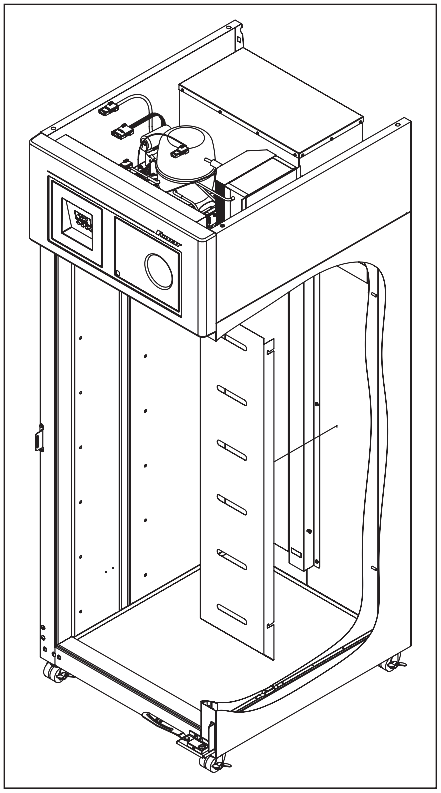

Fig. 44

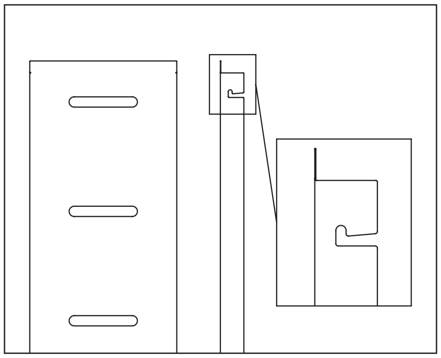

Annual cleaning

Removal of dust and other particulates from air intake areas and the condenser is important for proper operation. Environments with large amounts of dust may require more frequent cleaning.

1. Disconnect power to unit by turning power switch off (located on upper front facade panel) and removing power cord from receptacle.
2. The condenser can be accessed from top for cleaning. The side panel in front of condenser may be completely removed for easier cleaning by disconnecting facade and removing upper side panel. See “Facade removal” on page 27 for facade removal instructions.
3. Inspect drain pan for any debris or obstruction in condensate pan (Fig. 45.1).
4. Use a vacuum cleaner with brush attachment to clean condenser, compressor and related parts.
5. Reinstall upper side panel and facade if removed.

Fig. 45

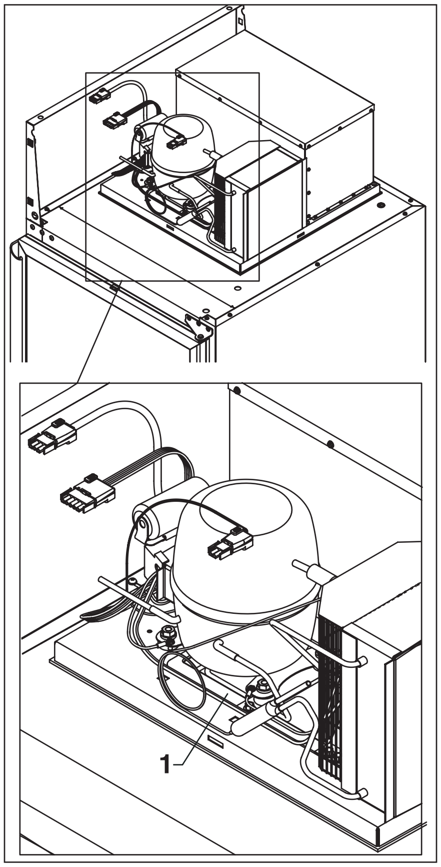

Fig. 46

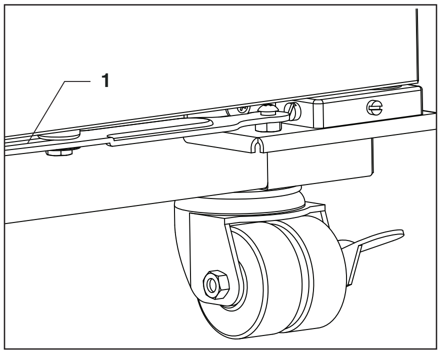

6. Door maintenance: Place a dab of white lithium grease on top of hold open arm and keeper on lower hinge assembly of door (Fig. 46.1).

Service

The temperature controller and evaporator probe indicate when the refrigeration system is required to turn on and off.

The refrigeration system removes heat from the cabinet interior and rejects it to the surrounding room air. When the evaporator probe temperature reaches 5.0 C (9.0 F) above the controller set point, the probe signals the controller to turn the refrigeration system on. The normally open controller contacts close and energize the condenser fan motor and compressor. The compressor uses a current-style starting relay and a starting capacitor to start the compressor motor.

When the evaporator temperature falls to 5.0 C (9.0 F) below the set point, the probe signals the controller to turn the refrigeration system off. The controller contacts reopen, which de-energizes the condenser fan motor and the compressor. The evaporator fan motor runs continuously.

Any accumulated frost on the evaporator coils melts during the off cycle. The condensate drains to a drain pan mounted in the base of the refrigeration unit. The pan is located under the compressor. The heat from the compressor, condenser and fan evaporates any condensate in the drain pan as well as providing preliminary cooling of the high pressure vapor prior to entering the condenser.

Refrigeration system

The REF20/25 series refrigeration system is designed to give many years of trouble-free service. Except for routine cleaning of the air-cooled condenser and related parts, the refrigeration system requires no service or maintenance. The system uses a capillary tube metering device and is critically charged. Access fittings are not provided. Temporary piercing valves are required to work on the refrigeration system. Follett recommends that if hoses are ever connected to the refrigeration system for service, the refrigerant should be recovered, permanent access valves should be installed and the system evacuated, and recharged by weighing in the correct refrigerant charge (refrigerant R134a, 11.4 oz (322g).

Note: Do not charge the system by pressures.

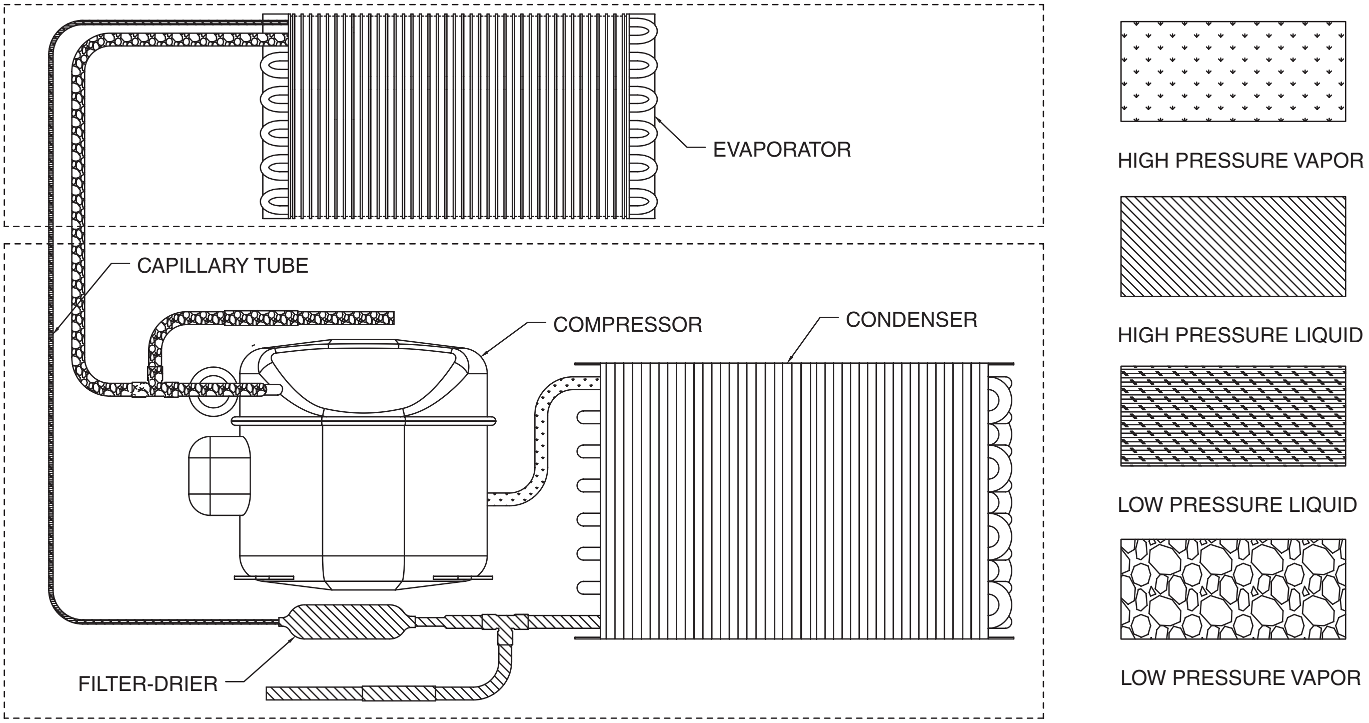

Defrosting

REF20/25 series upright refrigerators do not require manual defrosting. The evaporator defrosts automatically when the refrigeration unit is in the OFF cycle. The evaporator fan will run continuously.

Controller operation

ATTENTION
BEFORE MAKING ANY CHANGES TO FACTORY-DEFAULT REFRIGERATION SETTINGS, CONTACT FACTORY.

The controller displays product temperatures in degrees C or F (C is factory default) to 1 decimal point.

The controller is pre-programmed with a 0.5 C (32.9 F) set point which provides a compressor cut-in at 5.5 C (41.9 F) evaporator coil temperature and cut-out at -4.5 C (23.9 F) evaporator coil temperature. This will correlate to a product temperature of approximately 4.0 C (39.2 F).

All set points have a 5 C (9.0 F) differential. The 5.0 C (9.0 F) differential means that with a 0.5 C (32.9 F) set point, for example, the compressor will turn off at -4.5 C (23.9 F) evaporator temperature and turn on when the evaporator temperature reaches 5.5 C (41.9 F).

Product temperature will be displayed on the digital temperature display and chart recorder (if equipped).

Temperature sensor readings

To view temp sensor probe readings:

1. Press **Menu** button (Fig. 47).

Fig. 47

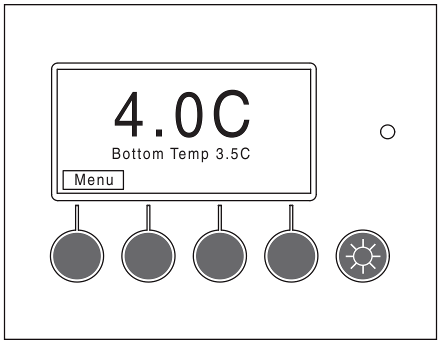
4.0C
Bottom Temp 3.5C
Menu

2. Use ▲/▼ to scroll and highlight **Refrigeration Controls** (Fig. 48).

Fig. 48

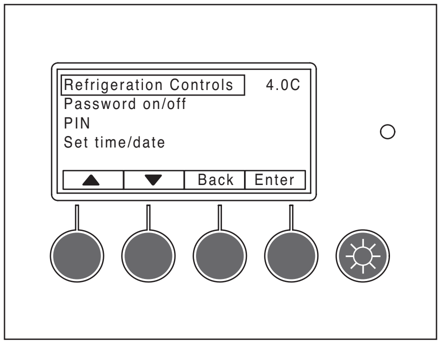
Refrigeration Controls
4.0C
Password on/off
PIN
Set time/date
▲
▼
Back
Enter

3. Press and hold **Enter** and ▼ together for 3 seconds (Fig. 49).

Fig. 49

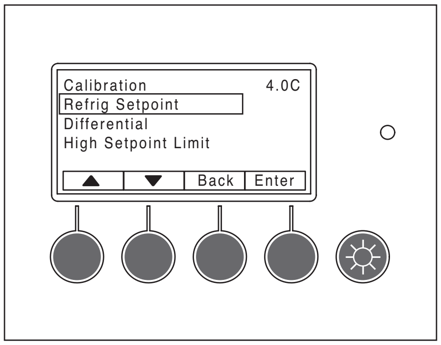
Calibration
4.0C
Refrig Setpoint
Differential
High Setpoint Limit
▲
▼
Back
Enter

4. Use ▲/▼ to scroll and highlight **Temp sensors** and press **Enter** to select (Fig. 50).

Fig. 50

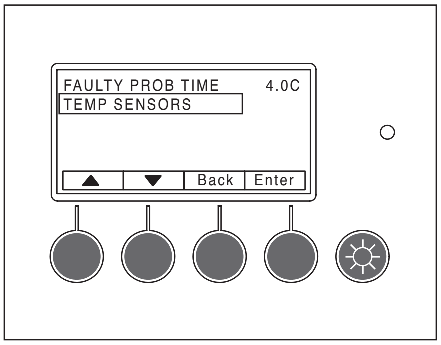
FAULTY PROB TIME
4.0C
TEMP SENSORS
▲
▼
Back
Enter

5. The following will be displayed (Fig. 51).
   RTD1= Top probe sensor reading
   RTD2= Bottom probe sensor reading
   (if equipped, otherwise displays default 25 C (77 F))
   NTC1= Evaporator Probe reading
   NTC2= Displays a default value and is not used
6. Press **Back** until main temperature display screen is displayed.

Fig. 51

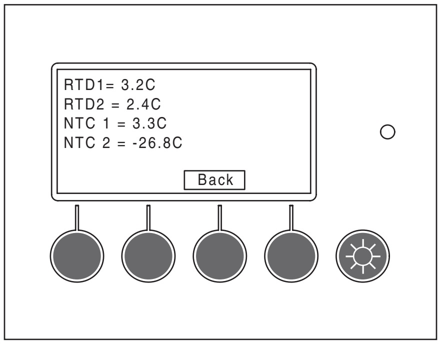

```
RTD1= 3.2C
RTD2 = 2.4C
NTC 1 = 3.3C
NTC 2 = -26.8C
```

Heated door (option) – changing cycle

Factory default for the heated door and fascia heater cycle is set to 50%, based on a 20 minute cycle (e.g. 50% = 10 minutes off, 10 minutes on).

1. Press **Menu** button (Fig. 52).

Fig. 52

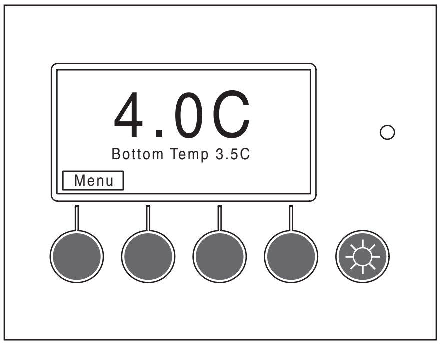

```
4.0C
Bottom Temp 3.5C
```

2. Use ▲/▼ to scroll and highlight **Refrigeration Controls** (Fig. 53).

Fig. 53

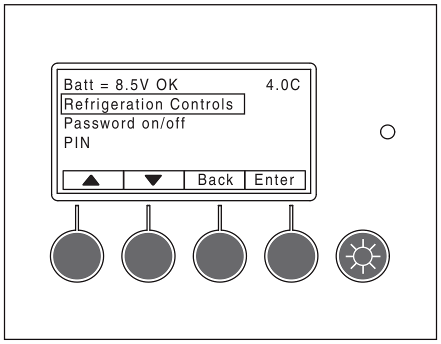

```
Batt = 8.5V OK                4.0C
```

Refrigeration Controls
Password on/off
PIN
▲
▼
Back
Enter

3. Press and hold **Enter** and ▼ together for 3 seconds (Fig. 54).

Fig. 54

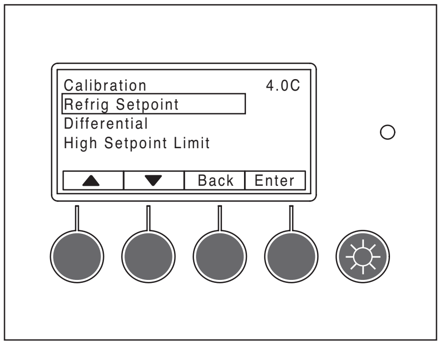
Calibration
4.0C
Refrig Setpoint
Differential
High Setpoint Limit
▲
▼
Back
Enter

4. Use ▲/▼ to scroll and highlight **Door Heater Cycle** and press **Enter** to select (Fig. 55).

Fig. 55

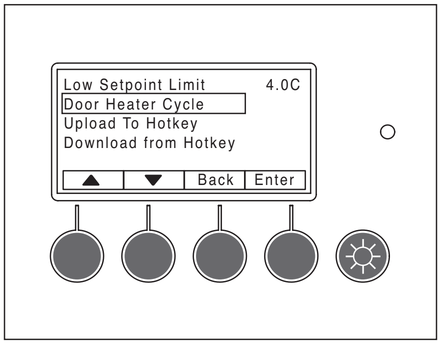
Low Setpoint Limit
4.0C
Door Heater Cycle
Upload To Hotkey
Download from Hotkey
▲
▼
Back
Enter

5. Heater ON cycle is shown as a percentage of 10 minute cycle (Fig. 56).
6. Use ▲/▼ to adjust heater ON cycle percentage and press **Enter** to select.
7. Press **Back** until the main temperature display screen is displayed.

Fig. 56

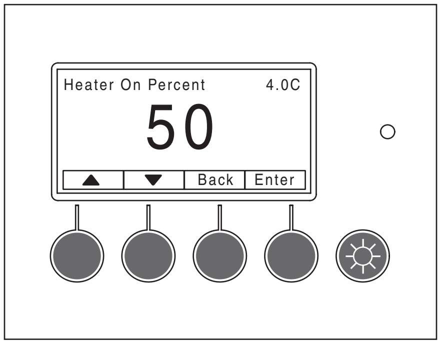
Heater On Percent
4.0C
50
▲
▼
Back
Enter

Changing temperature set point

ATTENTION
BEFORE MAKING ANY CHANGES TO FACTORY-DEFAULT REFRIGERATION SETTINGS, CONTACT FACTORY. FACTORY DEFAULT IS IN DEGREES C. IF USER HAS CHANGED DISPLAY TO SHOW TEMPERATURE IN DEGREES F, ALL OTHER TEMPERATURES WILL DISPLAY IN DEGREES F.

The temperature control system is preset by the factory to provide a product temperature of approximately 4.0 C (39.2 F). If desired, the evaporator set point temperature can be changed to achieve a different product temperature. The factory preset 5.0 C (9 F) differential will be maintained regardless of the controller set point.

EXAMPLE:

If the product temperature is 4.0 C (39.2 F) and the product temperature needs to be 3.0 C (37.3 F). Adjust the refrigeration set point down 1.0 C to -0.5 C (1.8 F to 31.1 F) from default setting of 0.5 C (32.9 F).

Changing the temperature set point:

Fig. 57

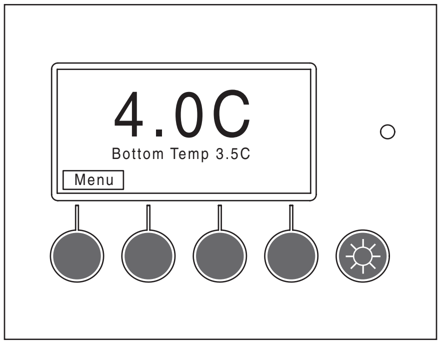
4.0C
Bottom Temp 3.5C
Menu

1. Press **Menu** button (Fig. 57).
2. Use ▲/▼ to scroll and highlight **Refrigeration Controls** (Fig. 58).

Fig. 58

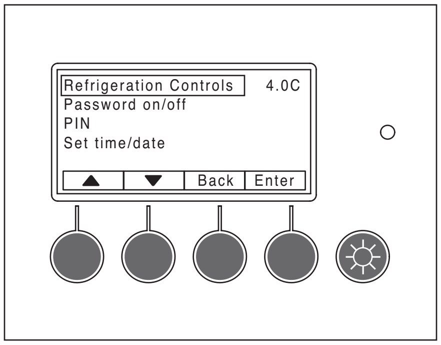
Refrigeration Controls
4.0C
Password on/off
PIN
Set time/date
▲
▼
Back
Enter

3. Press and hold **Enter** and then ▼ together for 3 seconds.
4. Scroll ▼ to **Refrig Setpoint**, press **Enter** to select (Fig. 59).

Fig. 59

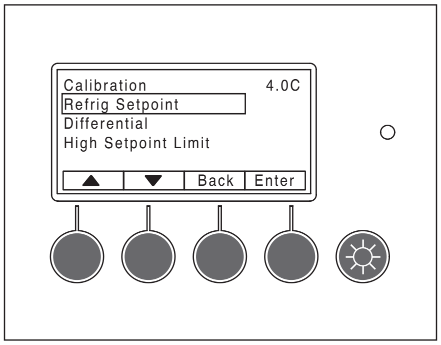
Calibration
4.0C
Refrig Setpoint
Differential
High Setpoint Limit
▲
▼
Back
Enter

5. Use ▲/▼ to increase or decrease the set point and press **Enter** to select (Fig. 60).
6. Press **Back** until the main temperature display screen is displayed.

Fig. 60

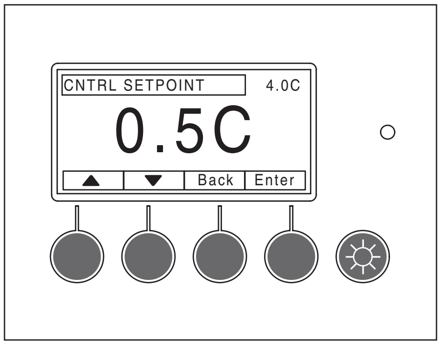

Facade removal

The facade is removed by loosening the top left and right Phillips screws on the back of the facade to allow the securing clips to rotate away from the side panels. The facade can simply pull off of the front by pulling it out of the bayonet mounts that secure it to the upper left and right panels. If the facade will be completely removed, the electrical plugs should be disconnected. The ground wire should be removed from the top right grounding screw on the cabinet box, not from the facade (Fig. 61.1).

Fig. 61

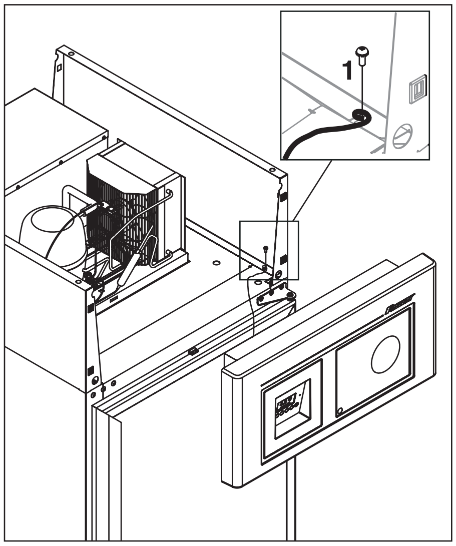

Controller replacement

⚠ CAUTION

- **Controller board is susceptible to electrostatic discharge. Extreme care should be exercised by using a grounding strap when handling and installing control board.**

Fig. 62

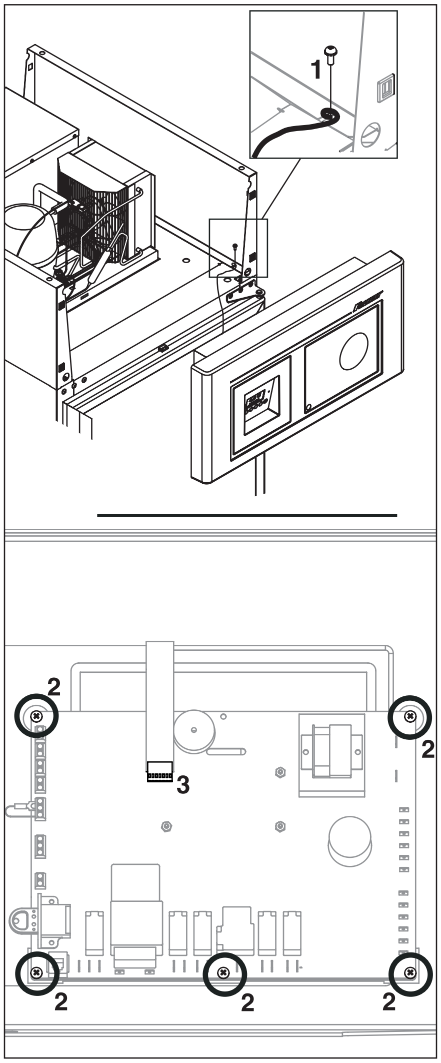

1. Turn off power to unit and unplug.
2. Remove facade and disconnect electrical plugs.
3. Remove screw securing ground screw to refrigerator cabinet (Fig. 62.1). Do not remove ground wire from facade.
4. Place facade face down on flat clean surface with bottom of facade facing you, and remove four screws attaching back panel to facade.
5. Lift and rotate back panel toward you.
6. Take precautions for proper grounding to reduce risk of electrostatic discharge (ESD) to the controller board.
7. Remove 5 screws securing board to facade (Fig. 62.2).
8. Reposition board away from mounting location and install new board.
9. Using wiring schematic (attached to inside of removed back panel) as a guide, remove wires one at a time from back of existing controller and connect to corresponding terminals on replacement controller.
10. If ribbon cable from the display is not connected, carefully connect to corresponding location on board (Fig. 62.3).
11. Make sure wiring is secured at same factory locations, so that cover will not pinch any wires when reinstalled.
12. Flip facade cover back into position on facade and reinstall 4 screws.
13. Place facade on top of refrigerator above compressor.
14. Reconnect electrical plugs and reinstall screw for grounding wire to grounding location on cabinet.
15. Remount facade to bayonet mounts.

Reversing the door swing (requires a new door)

REF20/25 units ship standard with a non heated right hinged door. To change to a left hinged configuration requires a new door. For heated door options other parts may be required. If the unit has a heated door option consult technical service by calling (877) 612-5086 or +1 (610) 252-7301.

Heated doors

Heated doors are factory installed. An unheated door cannot be retrofitted to a heated door in the field.

Door gasket replacement

1. Remove existing gasket from mounting track (Fig. 63).
2. Verify mounting track is free of any remaining gasket material.
3. Align new gasket with mounting track and press firmly in place.
4. Open and close door, checking for proper gasket seal without pinching against refrigerator.

Fig. 63

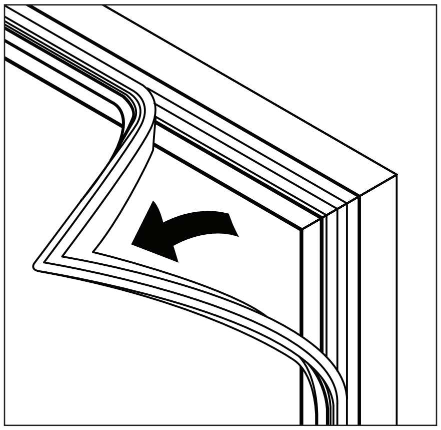

Slide-out unit cooler

Follett's slide-out refrigeration system allows technicians to remove the entire unit from the refrigerator top.

1. If necessary remove facade and upper side panels.
2. Remove four bolts securing unit cooler to refrigerator top (Fig. 64).
3. Gently lift off cooler.

Fig. 64

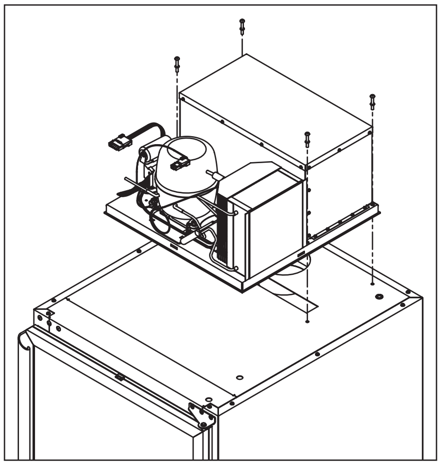

Wiring diagram (After Serial Number E15526)

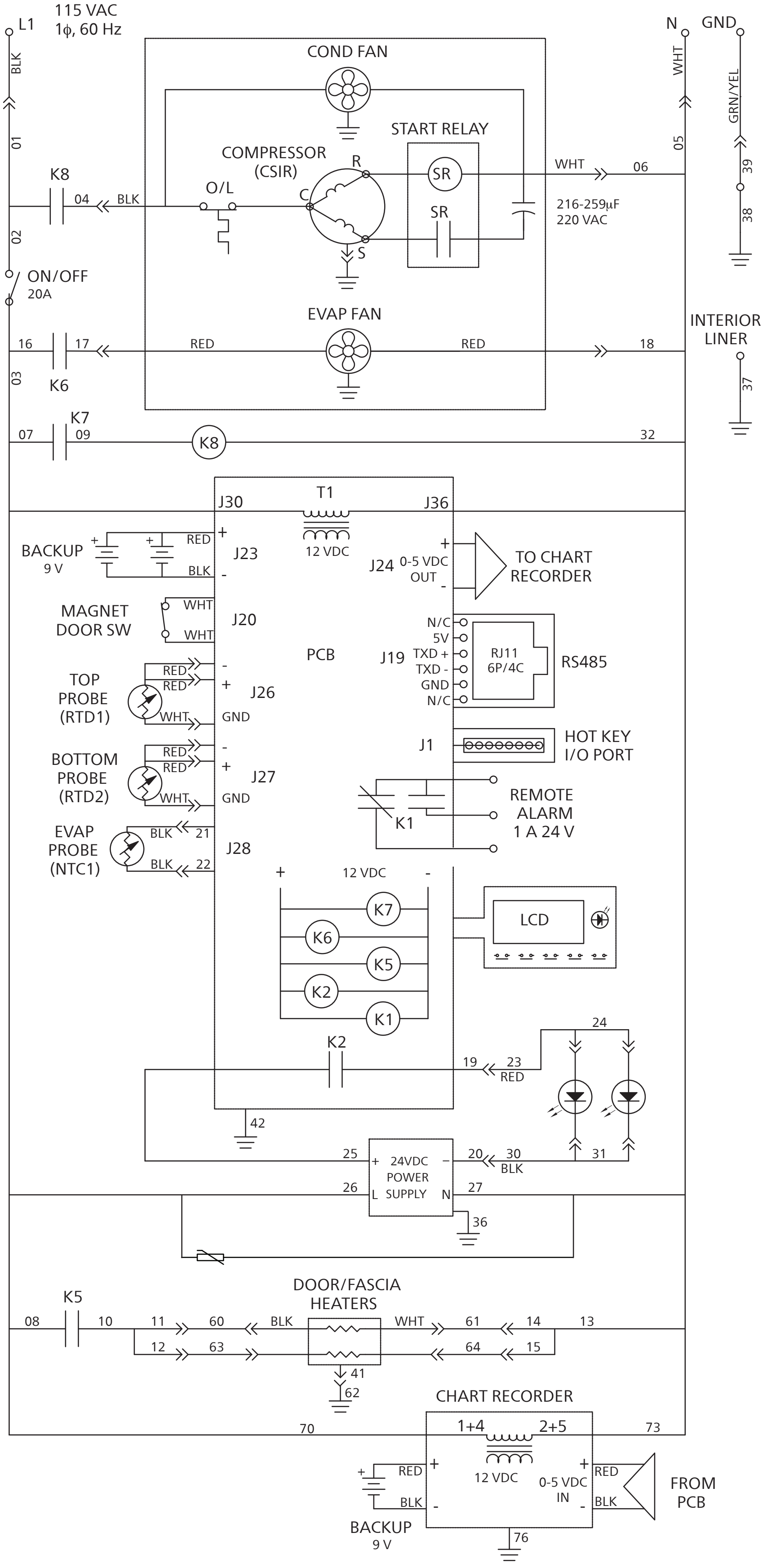
L1
115 VAC
1ϕ, 60 Hz
N
GND
BLK
WHT
GRN/YEL
COND FAN
START RELAY
COMPRESSOR
(CSIR)
R
C
S
SR
SR
O/L
K8
04
BLK
01
02
05
06
WHT
39
38
216-259μF
220 VAC
ON/OFF
20A
EVAP FAN
INTERIOR
LINER
16
17
RED
RED
18
03
K6
37
K7
07
09
K8
32
T1
J30
J36
12 VDC
BACKUP
9 V
RED
BLK
J23
+
-
J24
0-5 VDC
OUT
TO CHART
RECORDER
MAGNET
DOOR SW
WHT
WHT
J20
PCB
J19
N/C
5V
TXD +
TXD -
GND
N/C
RJ11
6P/4C
RS485
TOP
PROBE
(RTD1)
RED
RED
WHT
J26
GND
J1
HOT KEY
I/O PORT
BOTTOM
PROBE
(RTD2)
RED
RED
WHT
J27
GND
REMOTE
ALARM
1 A 24 V
K1
EVAP
PROBE
(NTC1)
BLK
21
BLK
22
J28
12 VDC
K7
K6
K5
K2
K1
LCD
K2
24
19
23
RED
42
25
24VDC
POWER
SUPPLY
L
N
20
30
BLK
31
26
27
36
K5
DOOR/FASCIA
HEATERS
08
10
11
60
BLK
WHT
61
14
13
12
63
64
15
41
62
CHART RECORDER
70
1+4
2+5
73
RED
BLK
12 VDC
0-5 VDC
IN
RED
BLK
FROM
PCB
BACKUP
9 V
76

Wiring diagram (After Serial Number E15526)

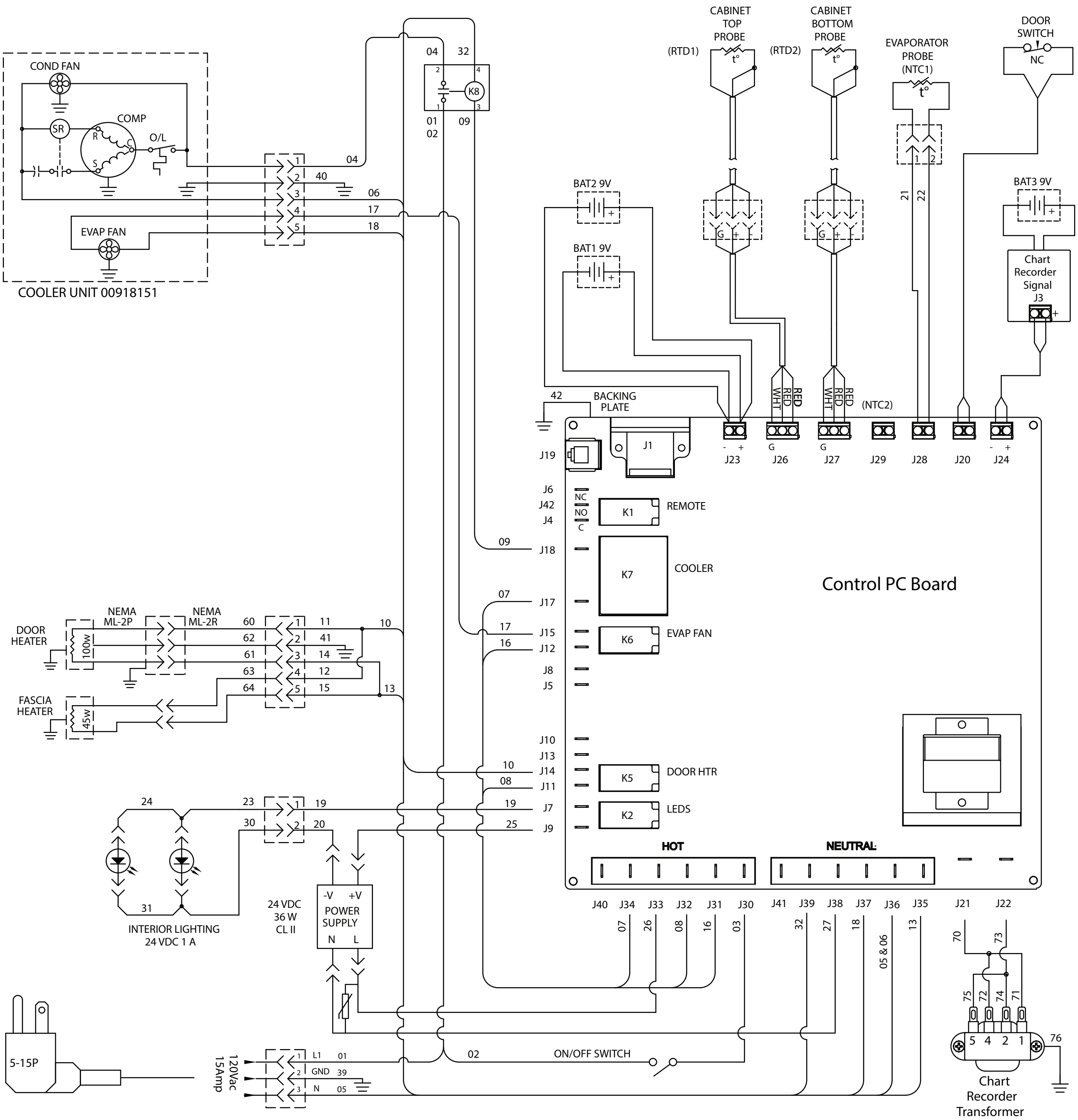

COND FAN
COMP
SR
O/L
EVAP FAN
COOLER UNIT 00918151
K8
CABINET TOP PROBE (RTD1)
CABINET BOTTOM PROBE (RTD2)
EVAPORATOR PROBE (NTC1)
DOOR SWITCH NC
BAT2 9V
BAT1 9V
BAT3 9V
Chart Recorder Signal J3
BACKING PLATE
(NTC2)
J1
J19
J23
J26
J27
J29
J28
J20
J24
K1 REMOTE
K7 COOLER
K6 EVAP FAN
K5 DOOR HTR
K2 LEDS
Control PC Board
HOT
NEUTRAL
DOOR HEATER 100w
NEMA ML-2P
NEMA ML-2R
FASCIA HEATER 45w
INTERIOR LIGHTING 24 VDC 1 A
24 VDC 36 W CL II
POWER SUPPLY
5-15P
120Vac 15Amp
ON/OFF SWITCH
Chart Recorder Transformer

Component Details

Compressor amperage

RLA - 7.6A, LRA - 44.5A

Compressor winding resistances

C-S (5.2Ω - 5.9Ω), C-R (1.2Ω - 1.3Ω)

Evaporator fan motor amperage

FLA - 0.22A

Condenser fan motor amperage

FLA - 0.46A

Wiring diagram (Serial Numbers D61742— E15526)

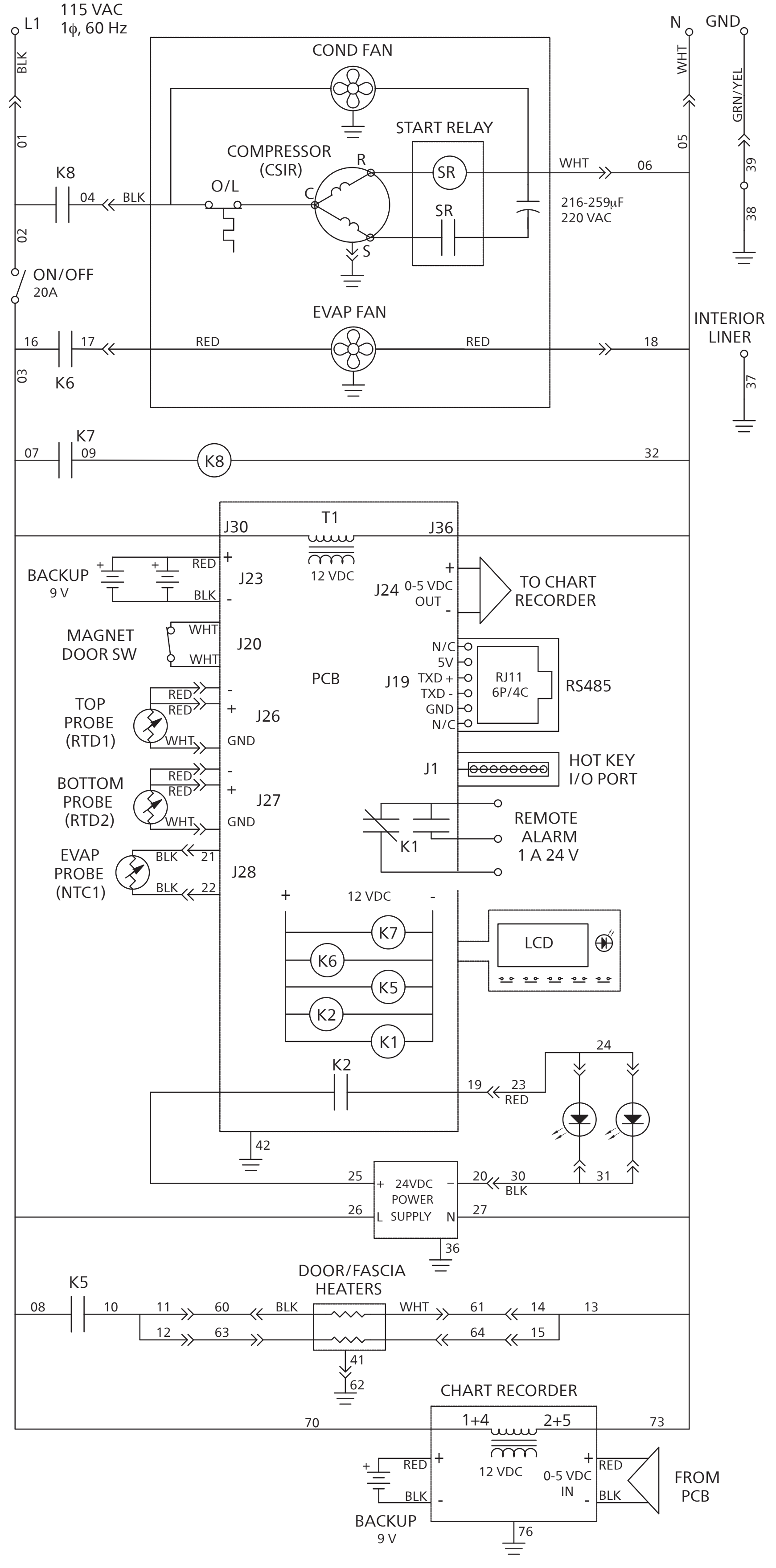

L1
115 VAC
1ϕ, 60 Hz
N
GND
BLK
WHT
GRN/YEL
01
02
03
05
39
38
COND FAN
COMPRESSOR
(CSIR)
START RELAY
R
C
S
O/L
SR
SR
K8
04
BLK
WHT
06
216-259μF
220 VAC
ON/OFF
20A
EVAP FAN
INTERIOR
LINER
37
16
17
RED
RED
18
K6
K7
07
09
K8
32
J30
T1
J36
12 VDC
BACKUP
9 V
RED
BLK
+
-
J23
J24
0-5 VDC
OUT
TO CHART
RECORDER
MAGNET
DOOR SW
WHT
WHT
J20
PCB
N/C
5V
TXD +
TXD -
GND
N/C
J19
RJ11
6P/4C
RS485
TOP
PROBE
(RTD1)
RED
RED
WHT
GND
J26
J1
HOT KEY
I/O PORT
BOTTOM
PROBE
(RTD2)
RED
RED
WHT
GND
J27
REMOTE
ALARM
1 A 24 V
K1
EVAP
PROBE
(NTC1)
BLK
21
BLK
22
J28
12 VDC
K7
K6
K5
K2
K1
LCD
K2
19
23
RED
24
42
25
24VDC
POWER
SUPPLY
L
N
26
27
20
30
BLK
31
36
K5
08
10
11
12
60
63
BLK
DOOR/FASCIA
HEATERS
WHT
61
64
14
15
13
41
62
CHART RECORDER
70
1+4
2+5
73
12 VDC
0-5 VDC
IN
RED
BLK
RED
BLK
BACKUP
9 V
FROM
PCB
76

Wiring diagram (Serial Numbers D61742— E15526)

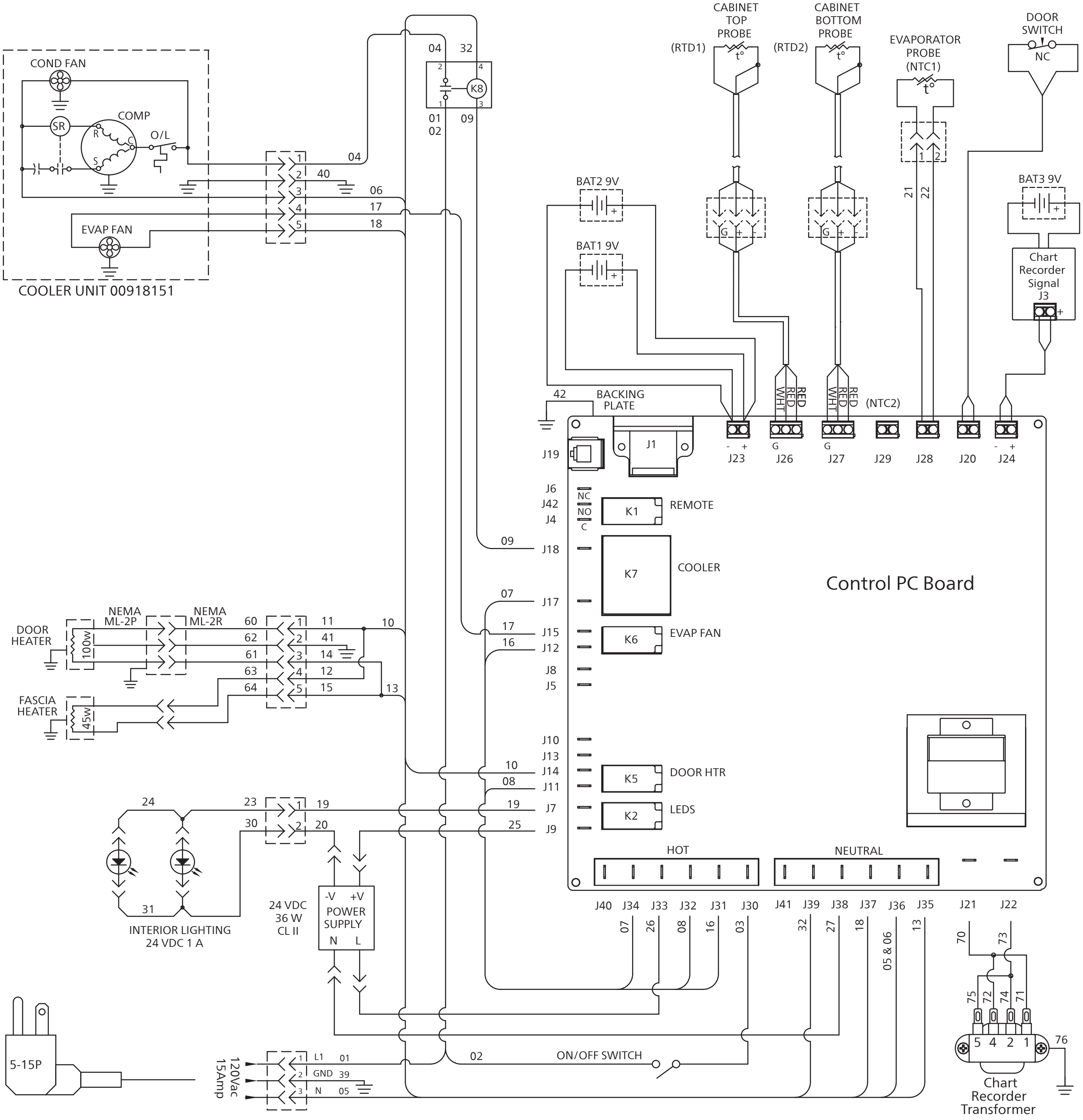

COND FAN
COMP
SR
R
C
S
O/L
EVAP FAN
COOLER UNIT 00918151
04
32
K8
01
02
09
40
06
17
18
CABINET TOP PROBE
(RTD1)
CABINET BOTTOM PROBE
(RTD2)
EVAPORATOR PROBE
(NTC1)
DOOR SWITCH
NC
BAT2 9V
BAT1 9V
BAT3 9V
21
22
Chart Recorder Signal J3
42
BACKING PLATE
RED
WHT
(NTC2)
J1
J19
J23
J26
J27
J29
J28
J20
J24
J6
J42
J4
NC
NO
C
K1
REMOTE
J18
K7
COOLER
Control PC Board
J17
J15
J12
K6
EVAP FAN
J8
J5
J10
J13
J14
J11
K5
DOOR HTR
J7
J9
K2
LEDS
HOT
NEUTRAL
DOOR HEATER
100w
NEMA ML-2P
NEMA ML-2R
60
62
61
63
64
11
41
14
12
15
10
13
FASCIA HEATER
45w
24
23
30
19
20
31
INTERIOR LIGHTING 24 VDC 1 A
24 VDC 36 W CL II
-V +V POWER SUPPLY N L
07
16
08
25
J40
J34
J33
J32
J31
J30
J41
J39
J38
J37
J36
J35
J21
J22
26
03
27
05 & 06
70
73
75
72
74
71
5 4 2 1
76
Chart Recorder Transformer
5-15P
120Vac 15Amp
L1
GND
N
39
05
ON/OFF SWITCH

Component Details

Compressor amperage

RLA - 7.6A, LRA - 44.5A

Compressor winding resistances

C-S (5.2Ω - 5.9Ω), C-R (1.2Ω - 1.3Ω)

Evaporator fan motor amperage

FLA - 0.22A

Condenser fan motor amperage

FLA - 0.46A

Wiring diagram (Before Serial Number D61742)

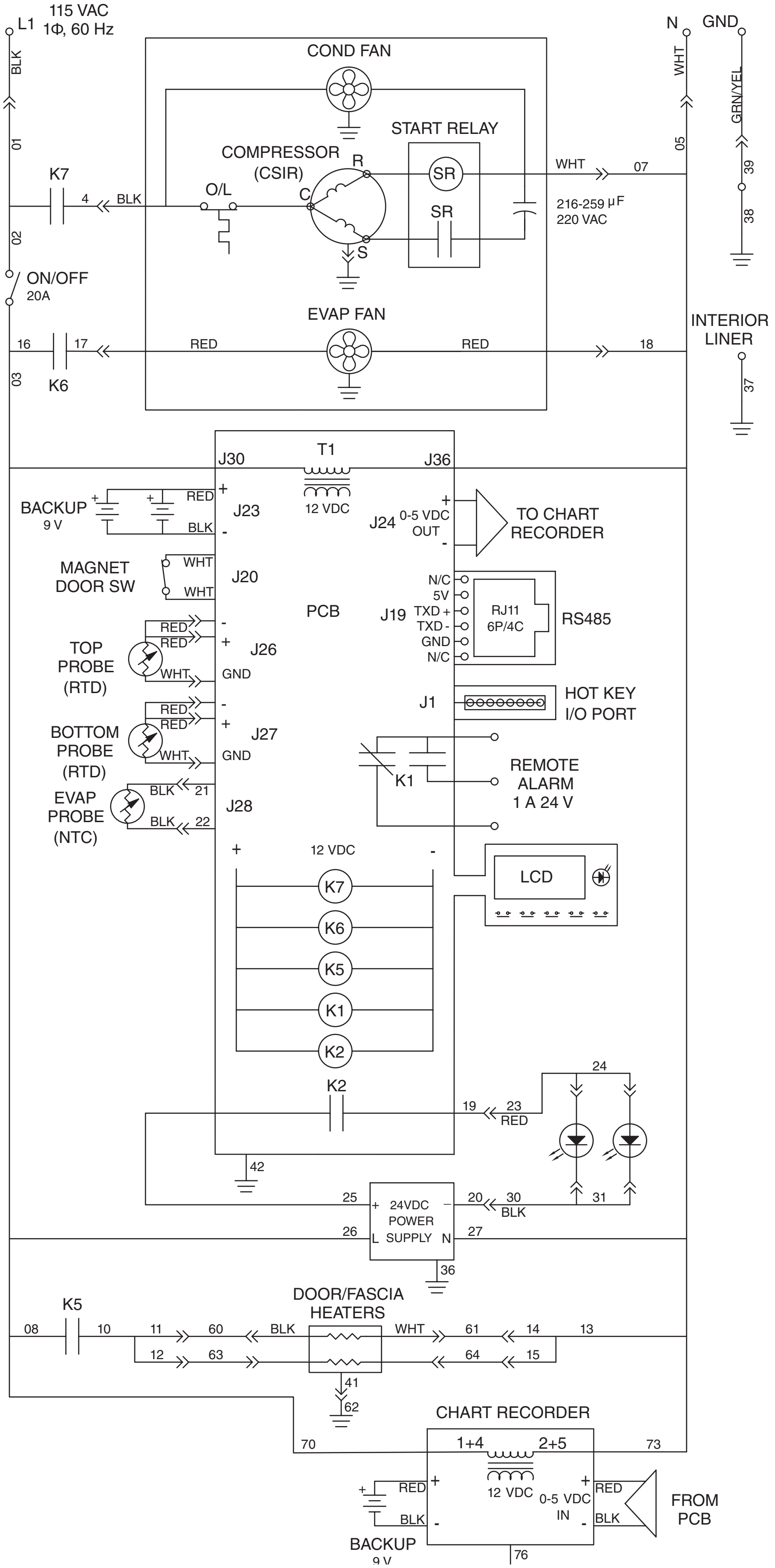
L1
115 VAC
1Φ, 60 Hz
BLK
01
K7
4
BLK
02
ON/OFF
20A
16
17
K6
03
COND FAN
COMPRESSOR
(CSIR)
O/L
R
C
S
START RELAY
SR
SR
WHT
07
216-259 μF
220 VAC
EVAP FAN
RED
RED
18
N
GND
WHT
05
GRN/YEL
39
38
INTERIOR
LINER
37
J30
T1
J36
12 VDC
BACKUP
9 V
RED
BLK
J23
+
-
J24
0-5 VDC
OUT
TO CHART
RECORDER
MAGNET
DOOR SW
WHT
WHT
J20
PCB
N/C
5V
TXD +
TXD -
GND
N/C
J19
RJ11
6P/4C
RS485
TOP
PROBE
(RTD)
RED
RED
WHT
J26
GND
J1
HOT KEY
I/O PORT
BOTTOM
PROBE
(RTD)
RED
RED
WHT
J27
GND
K1
REMOTE
ALARM
1 A 24 V
EVAP
PROBE
(NTC)
BLK
21
BLK
22
J28
12 VDC
LCD
K7
K6
K5
K1
K2
K2
24
19
23
RED
42
25
24VDC
POWER
SUPPLY
L
N
26
27
20
30
BLK
31
36
K5
08
10
11
60
BLK
DOOR/FASCIA
HEATERS
WHT
61
14
13
12
63
64
15
41
62
CHART RECORDER
70
1+4
2+5
73
RED
BLK
12 VDC
0-5 VDC
IN
RED
BLK
FROM
PCB
BACKUP
9 V
76

Wiring diagram (Before Serial Number D61742)

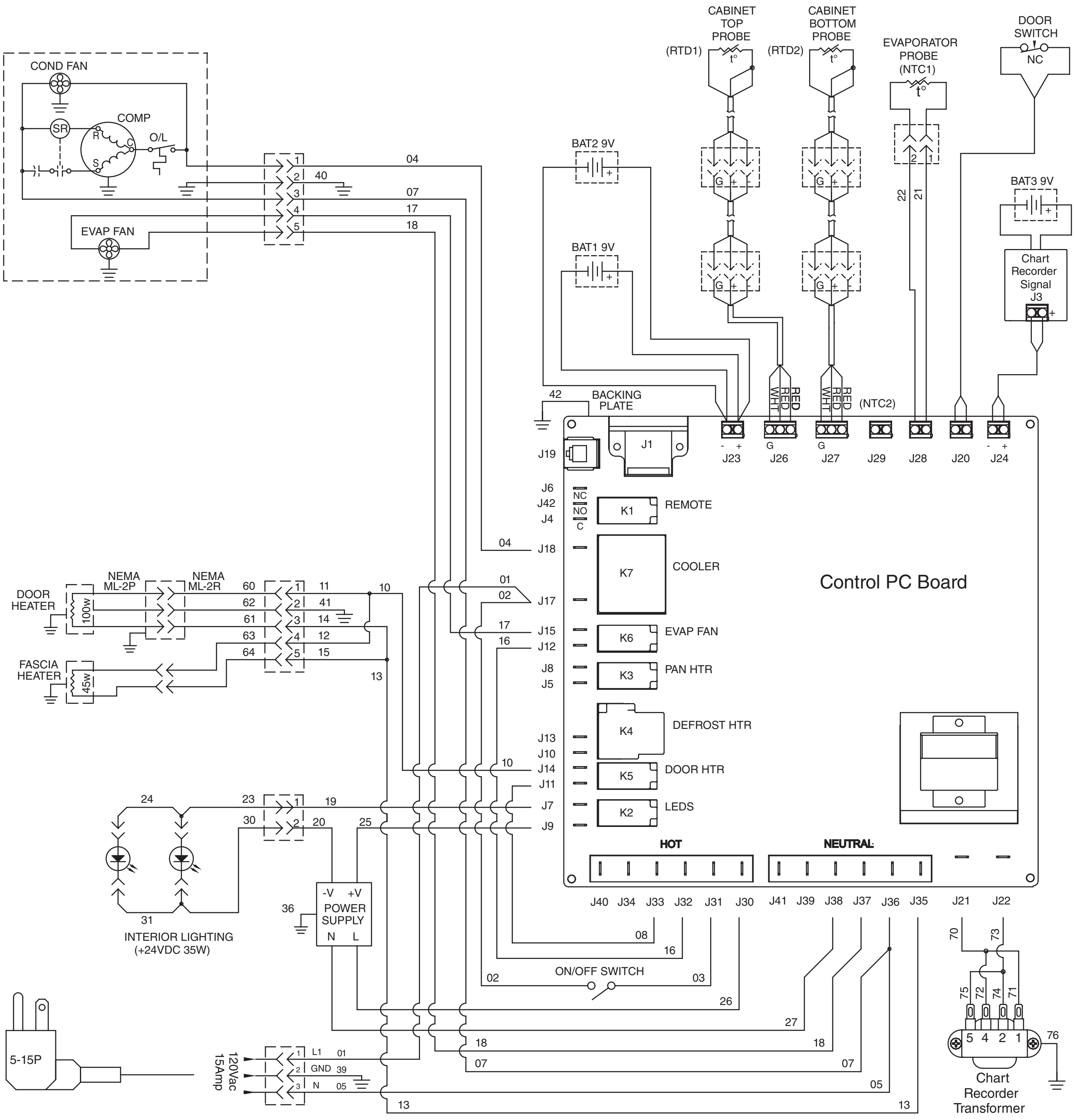
CABINET TOP PROBE
(RTD1)
CABINET BOTTOM PROBE
(RTD2)
EVAPORATOR PROBE (NTC1)
DOOR SWITCH
NC
COND FAN
COMP
SR
R
C
S
O/L
EVAP FAN
BAT2 9V
BAT1 9V
BAT3 9V
Chart Recorder Signal J3
04
40
07
17
18
22
21
RED
WHT
(NTC2)
42
BACKING PLATE
J1
J19
J23
J26
J27
J29
J28
J20
J24
J6
J42
J4
NC
NO
C
K1
REMOTE
J18
K7
COOLER
Control PC Board
01
02
J17
J15
J12
K6
EVAP FAN
J8
J5
K3
PAN HTR
K4
DEFROST HTR
J13
J10
J14
J11
K5
DOOR HTR
J7
J9
K2
LEDS
HOT
NEUTRAL
J40
J34
J33
J32
J31
J30
J41
J39
J38
J37
J36
J35
J21
J22
DOOR HEATER
100w
NEMA ML-2P
NEMA ML-2R
60
62
61
63
64
11
41
14
12
15
10
13
FASCIA HEATER
45w
24
23
30
19
20
25
31
INTERIOR LIGHTING (+24VDC 35W)
36
-V
+V
POWER SUPPLY
N
L
08
16
ON/OFF SWITCH
03
26
27
5-15P
120Vac 15Amp
L1
GND
N
01
39
05
70
73
75
72
74
71
76
5 4 2 1
Chart Recorder Transformer

Component Details

Compressor amperage

RLA - 7.6A, LRA - 44.5A

Compressor winding resistances

C-S (5.2Ω - 5.9Ω), C-R (1.2Ω - 1.3Ω)

Evaporator fan motor amperage

FLA - 0.22A

Condenser fan motor amperage

FLA - 0.46A

Troubleshooting

Before calling for service

1. Check that unit is plugged in.
2. Test outlet with another appliance to verify power.

Problem	Indicators	Corrective Action
Refrigerator does not operate (no components run).	1. Power switch faulty or in OFF position; loose connection.	1. Turn power switch to ON position; check switch and connections.
	2. Refrigerator not plugged in.	2. Connect plug.
	3. No power at outlet.	3. Restore power.
	4. Temp controller not energizing components.	4. Check controller contact terminals for power. Replace controller if needed.
	5. Probe not sensing cut-in temperature.	5. Replace controller and/or probe.
Compressor does not run.	1. Thermal overload open or defective.	1. Allow to cool or replace.
	2. Capacitor and/or relay defective.	2. Replace as required.
	3. Compressor defective.	3. Replace compressor.
Evaporator fan motor does not run.	1. Defective fan motor.	1. Replace fan motor
Refrigerator does not shutoff.	1. Controller not sensing cut of temperature.	1. Replace controller and/or evaporator (NTC1) probe.
	2. Controller keeping refrigeration system energized.	2. Replace controller.
Refrigerator does not maintain temperature (all components run).	1. Condenser or evaporator coil needs cleaning.	1. Clean coils as needed.
	2. Door not closing.	2. Adjust door closure per page 5.
	3. Excessively high ambient.	3. Maximum recommended ambient is 100 F.
	4. Refrigerant leak.	4. Locate and repair leak.
	5. Incorrect refrigerant charge.	5. Recover, evacuate and weigh in correct charge.
	6. Plugged capillary tube.	6. Replace capillary tube.
	7. Inefficient compressor.	7. Consult technical service.
	8. Faulty door gasket.	8. Replace door gasket

If problems persist after following this basic troubleshooting guide, call Follett's technical service group at (877) 612-5086 or +1 (610) 252-7301.

Appendix

Control key functions

MENU	Enter main menu
▲	Scroll up
▼	Scroll down
Back	Return to prior
ENTER	Select
MUTE	Mutes alarm
●	Buttons to select screen options
☼	Cabinet light ON/OFF
○	Alarm light

Menu Navigation table

Main Menu	Sub menu	Default setting	Range	Notes
If password is ON, enter 4 digit pin		3843	0000-9999	Adjust with up/down arrow, next moves to next digit, press enter to set
Alarm settings	High alarm set	40 C (104 F)	40 to -40 C (104 to -40F)	Default is set high to not alarm on initial cool down
	Low alarm set	1.0 C (33.8 F)	40 to -40 C (104 to -40F)	
Display settings	Show bottom temp	NO	YES/NO	
	Display inverse	YES	YES/NO	Reverse light lettering with dark background
	Degrees F/C	C	F or C	Displays temperatures in F or C
Min/Max temp				Records min/max temperature and time of top probe. Up/down arrow displays min/max. Enter to reset.
Batt = _V OK				Shows status of (2) 9V batteries.
Refrigeration controls (press and hold down-arrow and ENTER for 3 seconds)	Calibration	Cal top probe		Adjust with up/down arrow, press enter to set
		Cal bottom probe		Adjust with up/down arrow, press enter to set
	Refrig. setpoint	0.5 C (32.9 F)	40 to -40 C (104 to -40F)	
	Differential	5.0 C (9.0 F)	3.0 to 6 C (5.4 to 10.8 F)	
	High setpoint limit	5.0 C (41.0 F)	40 to -40 C (104 to -40F)	
	Low setpoint limit	-1.5 C (29.3 F)	40 to -40 C (104 to -40F)	
	Door heater cycle	0%	0 to 100%	Heater on percent (50% for heated door option)
	On time	4 min	2-14 min	Compressor on time
	Off time	8 min	2-14 min	Compressor off time
	Temp sensors			Displays probe temperatures
Password ON/OFF		OFF	ON/OFF	
PIN		3843	0000-9999	Any four digit PIN can be stored beside the permanent factory default. Adjust with up/down arrow, next moves to next digit, press enter to set.
Set Time/Date				Adjust with up/down arrow, next moves to next digit, press enter to set
Set alarm volume		High	High/Med/Low	Buzzer volume
Alarm silence		ON	ON/OFF	Audible alarm

Replacement parts

Unit cooler

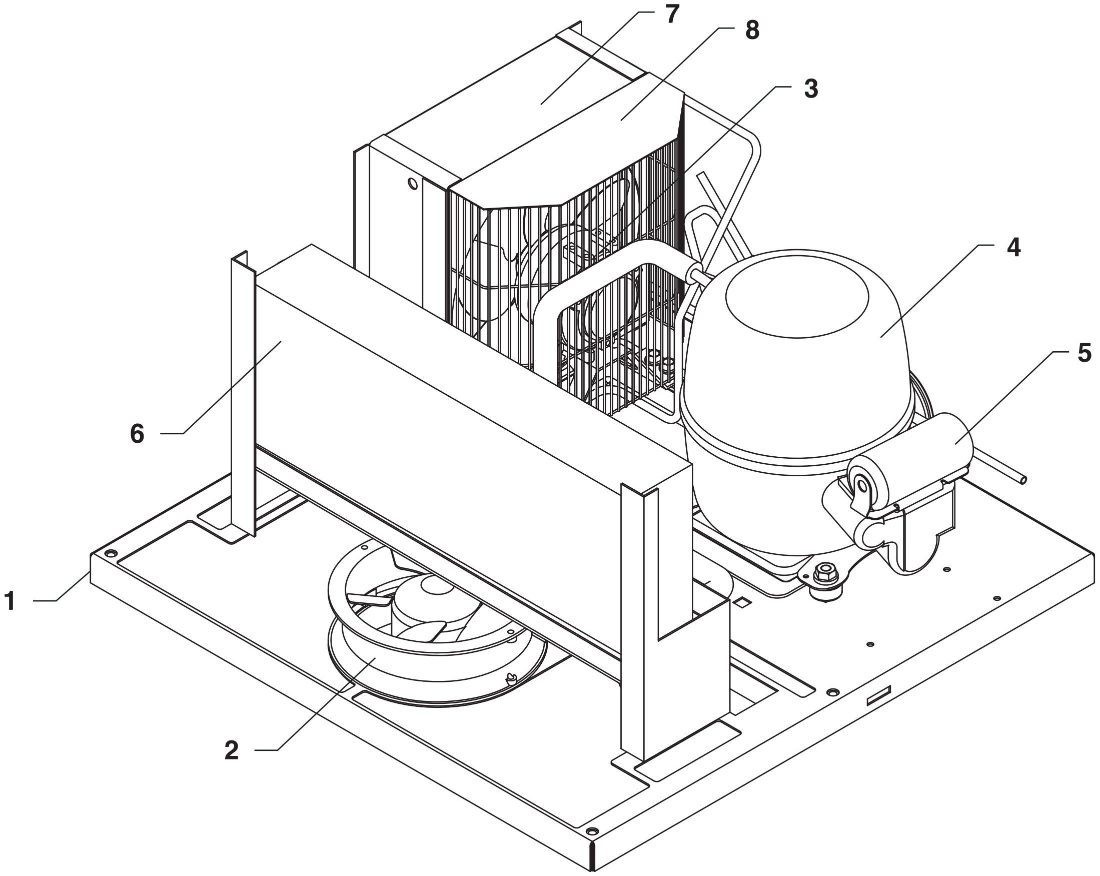

Reference	Description	Part #
Not shown	Gasket, unit cooler	00912980
Not shown	Probe, evap, NTC	00940148
1	Unit cooler with mounting bolts and gasket	00939785
2	Evaporator fan motor with blade	00945311
3	Condenser fan motor with blade	01179704
Not shown	Cap tube and drier	00945378
4	Compressor with start capacitor, relay and overload	01096015
5	Start capacitor	01077734
Not shown	Start relay	00945360
Not shown	Compressor overload	00945386
6	Evaporator	00945766
7	Condenser	00945774
8	Fan guard, condenser	00945782
Not shown	Cord and plug kit	00939900

Cabinet

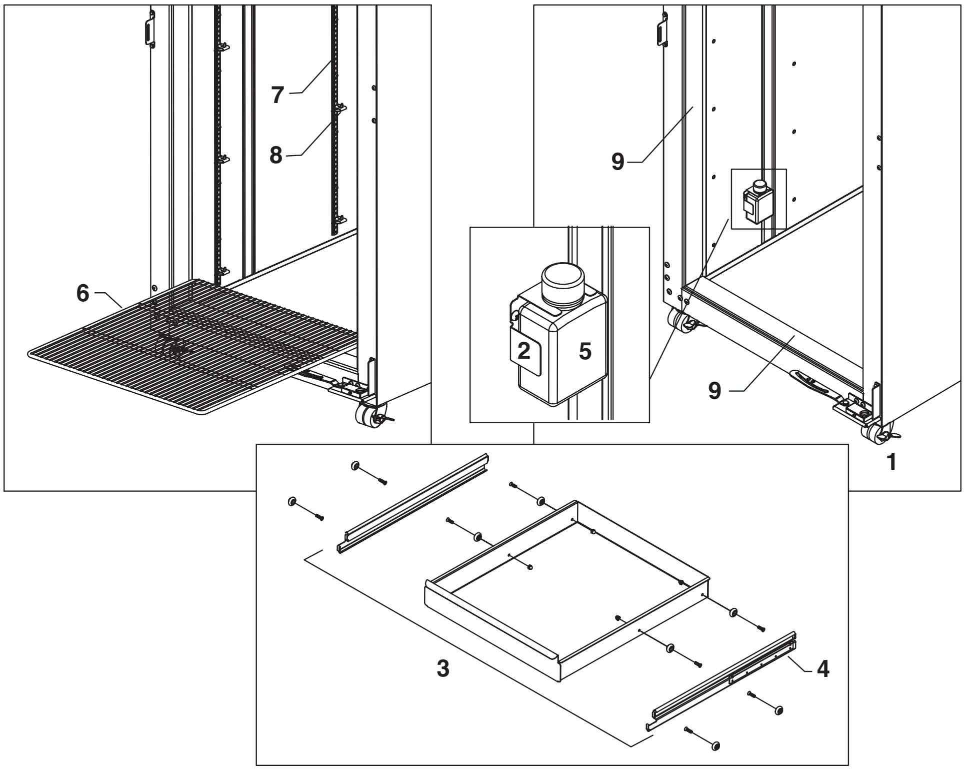

Reference	Description	Part #
1	Caster, swivel with brake	00187674
2	Bracket, bottle, 125ML	00171132
3	Drawer, assembly, REF25	00939652
3	Drawer, assembly, REF20	00939660
4	Slide, drawer, REF25 (set of 2)	00193045
4	Slide, drawer, REF20 (set of 2)	00188367
5	Bottle with gasket	01015817
Not shown	Basket, assembly, REF25	00939710
Not shown	Basket, assembly, REF20	00939728
6	Shelf, REF25 (with supports)	01015841
6	Shelf, REF20 (with supports)	01015858
7	Pilaster	00901173
Not shown	Pilaster, screws	00902213
8	Support, shelf	00156240
Not shown	Air panel	00901561
Not shown	Probe, RTD, top	00918839
Not shown	Probe, RTD, NIST calibrated, top	01101096
Not shown	Probe, RTD, bottom	00988055
Not shown	Probe, RTD, NIST calibrated, bottom	01101104
Not shown	Plug, RTD probe	00919274
Not shown	Panel jack, female	00918847
9	Cover, thermal break (4 pieces)	00922997
Not shown	Channel, probe	01004159
Not shown	Bushing, probe channel (LB and PH require 2, BB requires 3)	00111104
Not shown	LED, light strip	00980912
Not shown	Wire clip, probe	00919910
Not shown	Glycerine (1 pint)	00959296
Not shown	LEDs (2), MOV and instructions	01049709

Facade

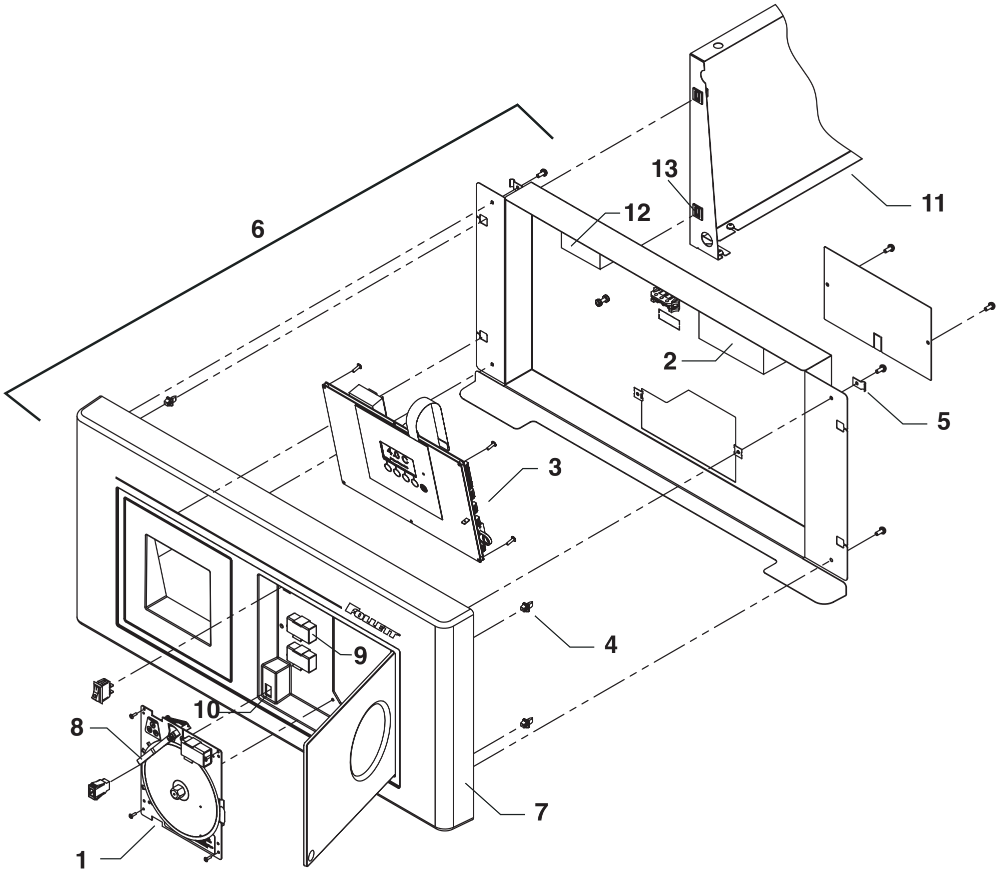

Reference	Description	Part #
1	Chart recorder	00906198
2	LED power supply	00939801
3	Controller (for serial numbers above D61742)	00918169
3	Controller (for serial numbers below D61742)	01009729
Not shown	Kit, door switch	00939959
4	Male, bayonet (strike, snap)	00179549
5	Facade, locking clip	00931501
6	Complete facade assembly with chart recorder	01007293
6	Complete facade assembly without chart recorder	01007301
7	Facade, cover, with chart recorder	00940130
Not shown	Facade, cover, without chart recorder	00940155
8	Pens, chart recorder, red (box of 6)	00918813
Not shown	Charts (box of 50) in degrees C	00918821
Not shown	Charts (box of 50) in degrees F	00967729
9	Battery, 9V	00112177
10	Latch, touch	00901165
11	Shell, upper side REF25	00940098
11	Shell, upper side REF20	00925933
Not shown	Top ventilated cover	00991760
12	Control relay, compressor (for serial numbers above D61742)	00980482
Not shown	Bottom probe, resistor	01041342
Not shown	MOV assembly	01042258
Not shown	Back support	00991695
13	Female, fastener	00179556

Door assembly

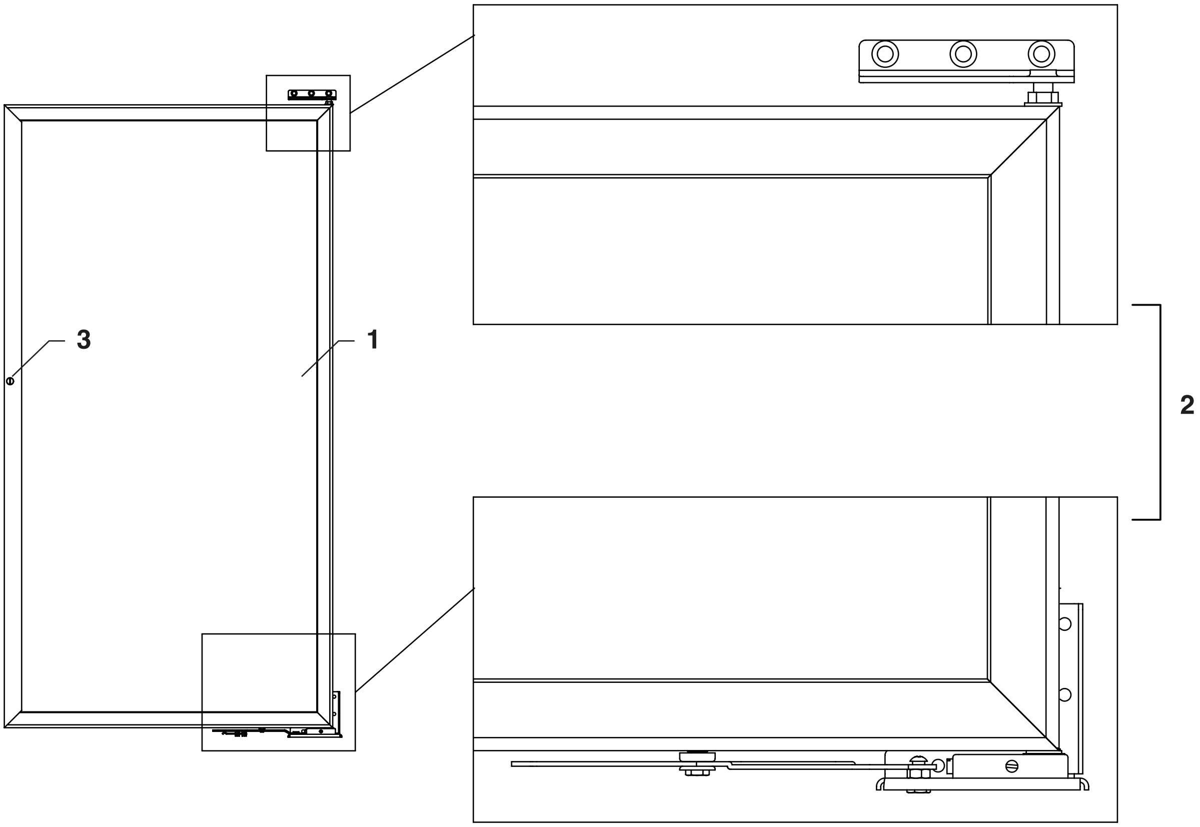

Reference	Description	Part #
Not shown	Door gasket	00945345
Not shown	Left-hand, non-heated door	00939876
1	Right-hand, non-heated door	00939884
2	Right-hand hinges and hardware with black colored hold open bracket	00996579
Not shown	Left-hand hinges and hardware with black colored hold open bracket	00996587
Not shown	Left-hand hinges and hardware with steel colored hold open bracket	00939918
Not shown	Right-hand hinges and hardware with steel colored hold open bracket	00939926
Not shown	Door magnet kit	00939967
Not shown	Bracket, strike	00939983
Not shown	Left-hand heated door	00939991
Not shown	Right-hand heated door	00940007
Not shown	Key, door	00945436
3	Lock, door	00945444
Not shown	Soft port kit	00940122
Not shown	Wall bracket kit, seismic anchoring	00927194
Not shown	Kit, Pyxis bracket	00927202
Not shown	Kit, Omnicell	00966432

Innovative solutions, inspired by ice

801 Church Lane • Easton, PA 18040, USA
Toll free (877) 612-5086 • +1 (610) 252-7301
www.follettice.com

© Follett LLC 6/17