Horizon Elite™

self-contained 1010 series Chewblet® ice machine

Model configurations			
Production capacity	Condenser	V/Hz/Ph	**Item number**
up to 1061 lb (482 kg)	air-cooled	208-230/60/1	**C1010A**

Installation kits (required)[3]		
Description	Ship wt lb (kg)	**Item number**
Installation kit for filling ice storage bins	10 (5)	**01564590**
Installation kit for filling countertop ice and beverage dispensers	10 (5)	**01564582**
Installation kit for filling Vision™ dispensers	10 (5)	**01564632**
Installation kit for filling drop-in dispensers	10 (5)	**01564640**
Installation kit for Ice Manager™ not required. Needed components are ordered and ship with Ice Manager, see form# 1050.	N/A	**N/A**
Ventilation kit required for C1010A and C1410A ice machines installed under a counter (includes grilles and gasket)	10 (5)	**01564624**

Ice transport tube kits for RIDE installations (required), not needed for top mount applications[3]		
Description	Ship wt lb (kg)	**Item number**
For bins, countertop ice and beverage dispensers and drop-in dispensers		
RIDE installations, 10' (3 m)	10 (5)	**01560549**
RIDE installations, 35' (10.7 m)	22 (10)	**01560556**
RIDE installations, 80' (24.4 m)	60 (27)	**01560564**
For Vision dispensers		
RIDE installations, 10' (3 m)	10 (5)	**01564657**
RIDE installations, 35' (10.7 m)	22 (10)	**01564665**
RIDE installations, 80' (24.4 m)	60 (27)	**01564673**

Options and accessories[4]

- ☐ Top kits for ice and beverage dispensers (listed on page 4)
- ☐ Wall mount bracket (item# 01085455)
- ☐ Ice machine stand, height-adjustable (item# 01085463)
- ☐ Timer to control one or two ice machines (item# 00967265)
- ☐ Sleep cycle kit for countertop dispenser applications for improved energy efficiency and component life (item# 01338276)
- ☐ One-year remote monitoring subscription and hardware for Open Kitchen (item# MDD-1003)
- ☐ Water filters (refer to form# 1058)
- ☐ SafeCLEAN Plus™ ice machine cleaner (refer to form# 8295)
- ☐ Additional accessories (refer to form# 4025)

Features

High performance Horizon Elite ice machines

- automatically transport ice through a tube with RIDE® technology from up to 75' (22.9 m) away
- consumer-preferred Chewblet ice is preferred 2:1 over cube ice
- ice dispenses reliably from ice and beverage dispensers
- quiet production without noisy harvest cycles

Revolutionary, scale inhibiting design

- produces ice that has 15% the TDS of the incoming water for optimum dispensing and long life in drinks
- quarantines and regularly expels scale producing dissolved solids to dramatically reduce scale buildup
- increases time between descaling and reduces or eliminates the need for expensive scale treatment
- saves 35% less water than comparable cubers

Durable, attractive ice machine

- regular bearing inspection or replacement is not required
- upgraded, easy-to-read LED operating status and diagnostic display

Designed with sanitation in mind

- Agion® silver-based antimicrobial product protection of key ice and water contact components[1]
- floatless, sealed design inhibits formation of biofilms
- semi-automatic cleaning and sanitizing system

Remote monitoring with Open Kitchen™

- provided in partnership with Powerhouse Dynamics (separate subscription required)
- real-time alerts and notifications
- remote diagnostics to maximize equipment uptime
- connects with equipment across other Middleby brands

Warranty

- 3 years parts and labor, 5 years compressor parts[2]

Certifications (applied to all products unless otherwise noted)

NSF® UL® CERTIFIED SAFETY LISTED SA4865 c UL™ Energy Verified

[1] Disclaimer: Antimicrobial protection is limited to the treated components and does not treat water or ice.
[2] Refer to form# 4025 for additional warranty information.
[3] Certifications do not apply to installation kits or ice transport tube kits.
[4] Certifications do not apply to options and accessories.

801 Church Lane | Easton, PA 18040, USA
1.800.523.9361 | 1.610.252.7301 | follettice.com

FOLLETT®

Dimensional drawing

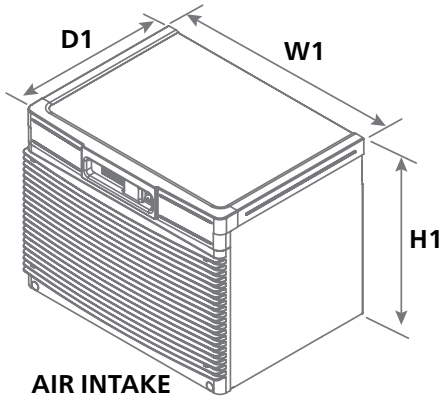

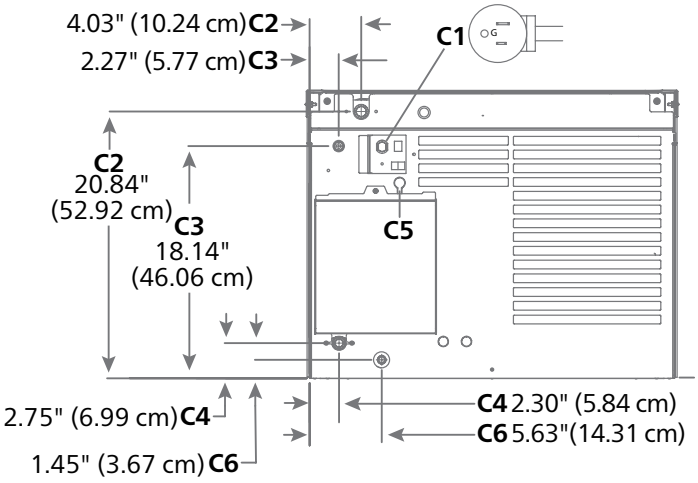

Specification

W1 Width	29.15" (74.0 cm)
D1 Depth	1010 series: 23.25" (59.1 cm)
H1 Height	22.50" (57.2 cm)
Clearance	top, left and right – 1.00" (2.54 cm)
C1 Electrical 208-230 V/60/1	1010 series: 11 amps, requires dedicated 15 amp circuit, 6' (1.8 m) cord, NEMA 6-15 plug
Operating power	1010 series: 2.4 kW
C2 Ice transport tube	see page 8 for details
C3 Water inlet	3/8" OD push-in water inlet – internal connection
C4 Drain	3/4" MPT, 1" drain required. See page 7 for details.
C5 Ice bin signal cord	for Vision applications only
C6 Auxiliary drain (required)	3/8" OD push-in
Air temperature	50 -100 F (10 - 38 C)
Water temperature	45 - 90 F (7 - 32 C)
Potable water pressure	10 - 70 psi (69 - 483 kPa). **NOTE:** The potable water total dissolved solids (TDS) content must be greater than 10 ppm for the water control system to function properly.
Ice production	see page 8
Energy consumption 90 F (32 C) air, 70 F (21 C) water	1010 series : air-cooled models – 4.80 kWh per 100 lb (45.4 kg) ice
Heat rejection	1010 series: air-cooled models – 11,300 BTU/hr (2,849 Kcal/hr)
Water consumption	12.0 gal (45 L) of potable water per 100 lb (45.4 kg) of ice (per AHRI test standards). 12.4 gal (46.9 L) at low TDS flush setting.
Refrigerant	R404a
Approximate ship weight	265 lb (120 kg)
Approximate net weight	237 lb (108 kg)

NOTE: For indoor use only

SHORT FORM SPECIFICATION: Follett® Horizon Elite ice machine model C1010A capable of producing compressed nugget ice using an efficient, sanitary horizontal evaporator/auger system and delivering ice by a flexible wire reinforced transport tube to _____ ice storage bin, _____ ice and water dispenser, _____ countertop ice and beverage dispenser, _____ Vision dispenser, _____ drop-in dispenser or _____ Ice Manager diverter valve system. Slide-out compressor/condenser/evaporator with utility docking station, front-mounted unit status display, evaporator water inlet at harvest end with automatic flush while producing ice, and semi-automatic cleaning and sanitizing system.

1 – Locating the ice machine

Horizon Elite self-contained Chewblet ice machines allow top-mounting or mounting in a base cabinet, on a wall or on a floor stand up to 75' (22.9 m) from the dispenser or ice bin with RIDE technology. In-cabinet mounting (RIDE applications) require special attention to service access, unit ventilation and ice tube runs (see pages 4-8).

Top mounting – ice and beverage dispensers (by others)	**RIDE model – Follett low-profile Vision ice and beverage dispensers**	**Top mount on Follett ice storage bins**
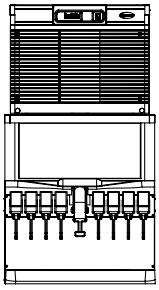	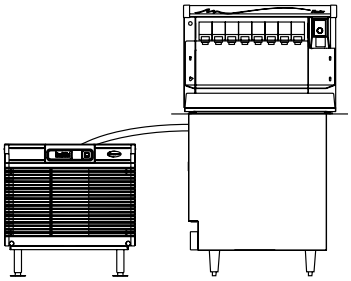	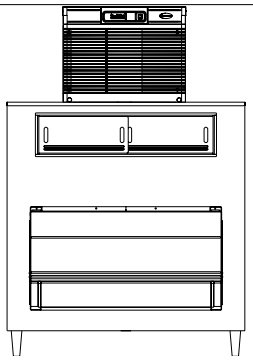
Important specifier notes	**Important specifier notes**	**Important specifier notes**
1. Dispenser must be compatible with nugget ice. See page 4 for compatible ice and beverage dispenser models and top kit numbers. 2. Verify ceiling or soffit height to ensure sufficient top clearance.	1. See page 4-6 for critical clearance and venting requirements. 2. Ice transport tube ships with Vision ice and beverage dispenser (Vision applications only).	1. See form# 8590 for bin sizing. Not for use with Ice•DevIce™ or Ice Pro™. 2. Verify ceiling or soffit height to ensure top clearance. 3. Locate floor sink or grate and drains in front of storage bin.

RIDE model – ice and beverage dispensers (by others)	**RIDE model – drop-in beverage dispensers (by others)**	**RIDE model – Follett ice storage bins**
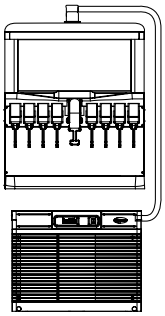	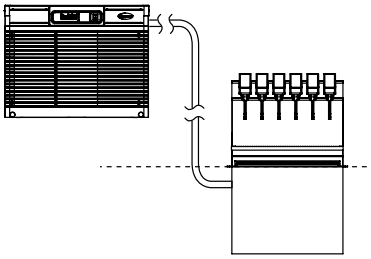	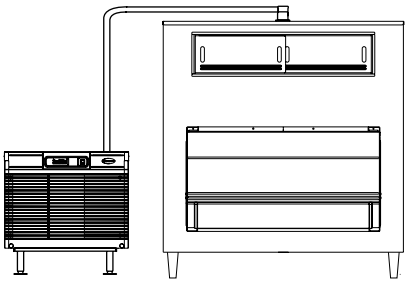
Important specifier notes	**Important specifier notes**	**Important specifier notes**
1. Dispenser must be compatible with nugget ice. Compatible dispensers include Coca-Cola Freestyle 9000, Cornelius DB/ID/DF150/175, Lancer 4500-22N, FS-16N, FS-22N and FS-44N, Servend MD150/175/200/250, SV175/200/250, MDH-402 and Follett Symphony Plus™ 110CM, as well as dispensers listed on page 4. 2. Coca-Cola Freestyle 7100 requires top adapter IC Code 46751 and ice kit IC Code 46430 only, and must be ordered from Coca-Cola. Coca-Cola Freestyle 9100 requires top kit HSF26SC. Consult with Coca-Cola and Follett to qualify application prior to ordering. 3. RIDE application is approved only for Pepsi Spire 3.0, 5.0 and 4.1 designed for top mount ice machines and requires MSP24SC for 3.0 and MSP30SC for 5.0 and 4.1, ordered separately. For manual fill versions of Pepsi Spire 3.0, 5.0 and 4.1, contact factory. 4. See page 4-6 for critical clearance and venting requirements.	1. Compatible with the following dispensers: Cornelius 1522, 1722, 2323, and Lancer 2200, 2300, 23300. 2. Requires 12.00" (30.5 cm) of access space for installation on transport tube side. 3. See page 4-6 for critical clearance requirements.	1. See form# 8590 for bin sizing. Not for use with Ice•DevIce or Ice Pro. 2. Locate floor sink or grate and drains in front of storage bin.

1 – Locating the ice machine (continued)

Top mounting – compatible ice and beverage dispensers [1]

Manufacturer	Model number	Width in (cm)	Depth [2] in (cm)	Height [3] in (cm)	Top kit
Coca-Cola dispensers	Freestyle 7000	30.10 (76.5)	33.11 (84.1)	47.00 (119.38)	H30F30-F [4,]
	Freestyle 7100	30.00 (76.2)	33.80 (85.8)	47.00 (119.4)	H30F30-F [4, 5]
Cornelius dispensers	DB/ED/DF 200 series	30.00 (76.2)	30.00 (76.2)	34.38 (87.3)	H30C30-F
	DB/ED/DF 250 series	30.00 (76.2)	30.00 (76.2)	38.38 (97.5)	H30C30-F
	DB/ED/DF 300 series	44.00 (111.8)	30.00 (76.2)	34.00 (86.4)	H30C44-(F or B) [6]
	FlavorFusion / Overload	30.00 (76.2)	33.13 (84.2)	39.38 (100.0)	H30C30-F-FF
	IDC215	30.00 (76.2)	33.13 (84.2)	39.38 (100.0)	H30C30-F-IDC
	IDC255 and Pro Fast Gate	30.00 (76.2)	33.13 (84.2)	36.38 (92.4)	H30C30-F-IDC
	IDC Pro	30.00 (76.2)	33.13 (84.2)	40.25 (102.2)	H30C30-X-PRO [7]
Lancer dispensers	4500-30N	30.00 (76.2)	30.50 (77.5)	36.50 (92.7)	H30L30-F
	FS-30N	30.00 (76.2)	30.50 (77.5)	42.13 (107.0)	H30L30-F
	Bevariety	30.00 (76.2)	31.00 (78.7)	37.75 (95.9)	H30L30-F-STP
	Bold 30i	30.00 (76.2)	34.25 (87.0)	43.75 (111.12)	H30L30F-STP
	Sensation 30"	30.00 (76.2)	31.00 (78.7)	38.25 (97.2)	H30L30-F-STP
	Sensation 44" / Twin Pour	44.00 (111.8)	31.00 (78.7)	39.38 (100.0)	H30L44-F-STP
	Touchpoint	32.50 (82.6)	33.70 (85.6)	40.00 (101.6)	H30L30-F-STP
Pepsi dispensers	Spire 5.0 / 4.1	30.50 (77.5)	36.00 (91.4)	42.75 (108.6)	H30P30-F
Servend dispensers	MDH-302	42.80 (108.7)	31.00 (78.7)	32.38 (82.2)	H30S44-(F or B) [6]

[1] All approved dispensers can be filled with a RIDE model Horizon Elite ice machine without a top kit except for Pepsi Spire 3.0, 5.0 and 4.1, see page 3 for details.
[2] Requires minimum 1.00" (2.54 cm) clearance between back of dispenser and wall.
[3] Net height after installation of top kit (excluding height of ice machine).
[4] Consult with Coca-Cola and Follett to qualify application prior to ordering.
[5] Top adapter IC Code 46753 and ice kit IC Code 46430 must also be ordered from Coca-Cola.
[6] Specify "F" for front facing, or "B" for backward facing units.
[7] Top designed with flexibility to accommodate front or back mounting.

2 – Undercounter/in-cabinet mounting

Cabinet details

Important specifier notes

1. Cabinet door opening must meet minimum size requirements shown and be free of obstructions to allow ice machine to slide out (no lip or utilities to block removal).
2. Cabinet base must be capable of supporting ice machine and allow ice machine to rest flat on cabinet bottom.
3. No counter supports, electric or plumbing can run in front of the ice machine.

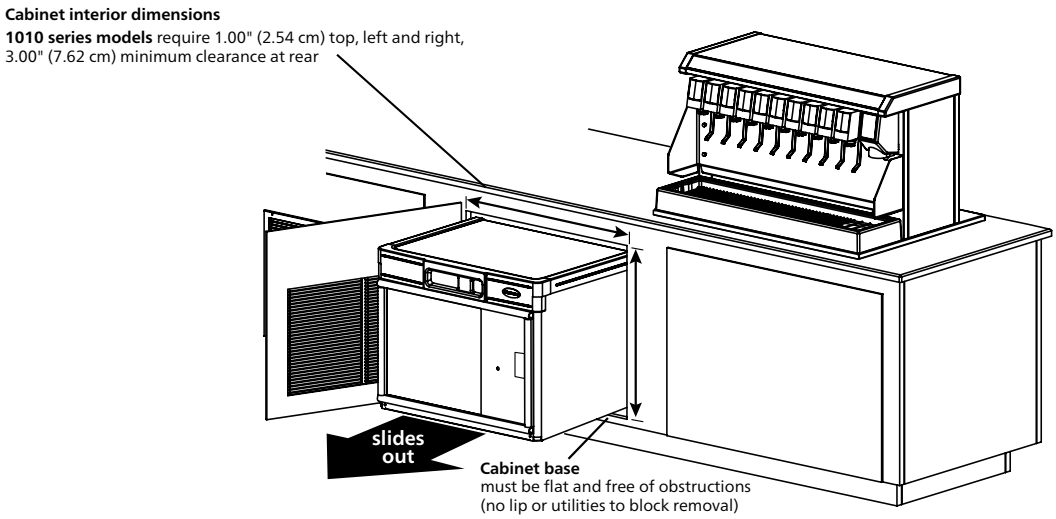

3 – Undercounter/in-cabinet mounting and ventilation

Using Follett ventilation kit, item# 01564624

Horizon Elite ice machines can be installed undercounter/in-cabinet to fill bins or dispensers using RIDE technology. Care must be taken to ensure proper cabinet venting to avoid recirculation of hot air. Improper venting can cause ice machine outages.

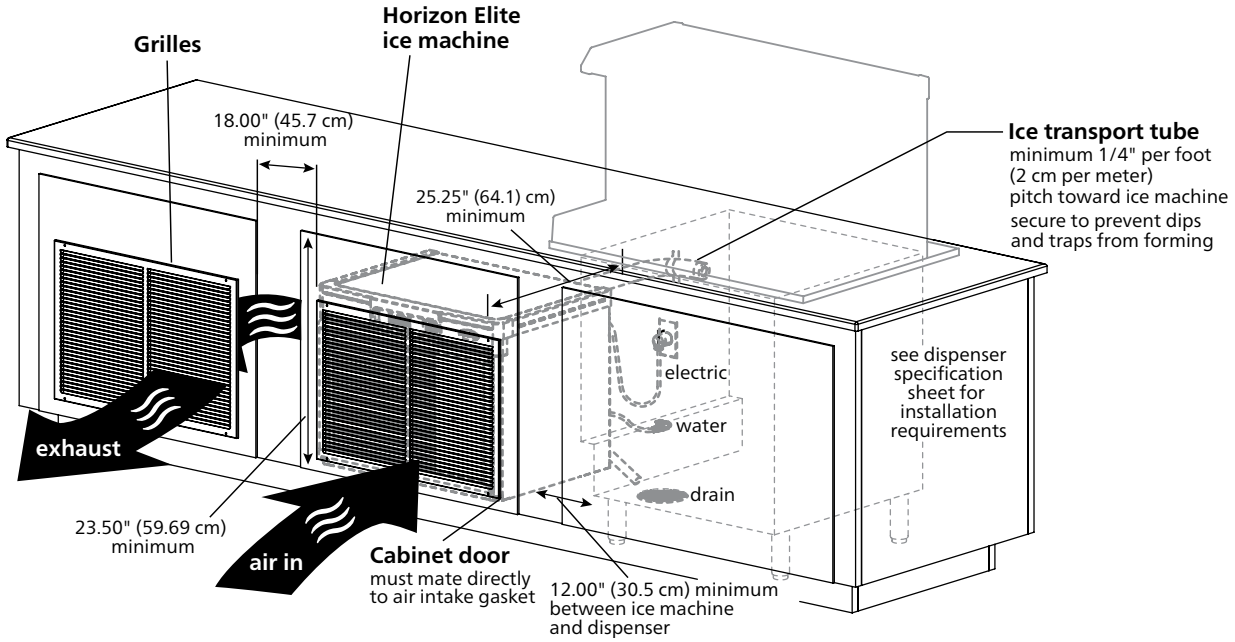

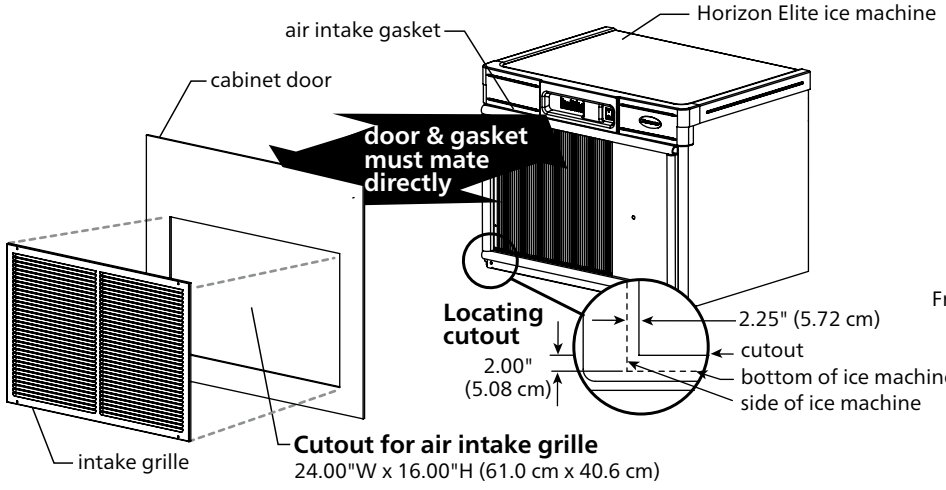

Completed installation with gasket and door in place

Side view

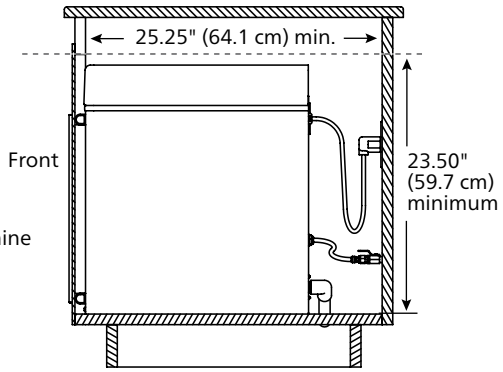

Important specifier notes for using Follett ventilation kit, item# 01564624

1. The exhaust grille must be located at least 18.00" (45.7 cm) from the supplied air intake grille (exhaust air must not recirculate with intake air).
2. Cabinet interior must be open to allow for unrestricted exhaust air flow.
3. Ice transport tube needs minimum 1/4" per foot (2 cm per meter) pitch toward ice machine and should be secured to prevent dips and traps from forming.
4. Cabinet door must mate directly to air intake gasket.
5. Cabinet interior must provide a minimum clear space of 23.50" (59.7 cm) high by 25.25" (64.1 cm) deep.
6. Cutout for grilles must meet minimum size requirements shown above.
7. Utilities should be conveniently located as shown.

Using grilles by others/alternate cabinet ventilation

Cabinets with ventilation or louvers other than the Follett ventilation kit require special consideration to provide proper ventilation. Recirculation of hot air will reduce ice machine performance and can cause ice machine outages.

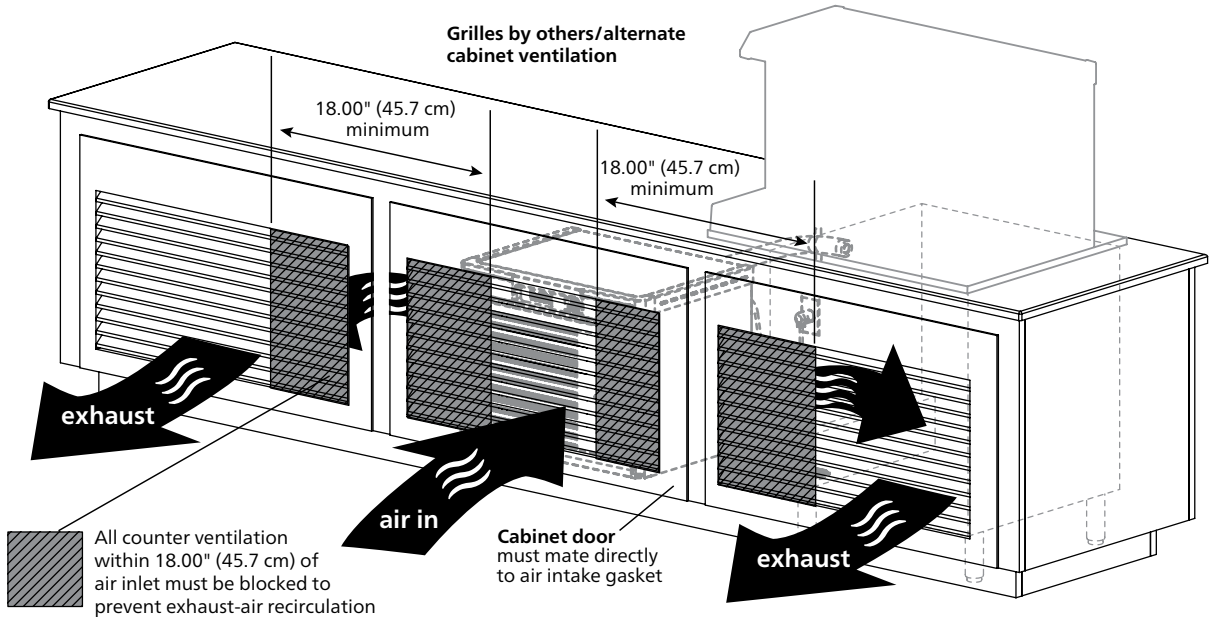

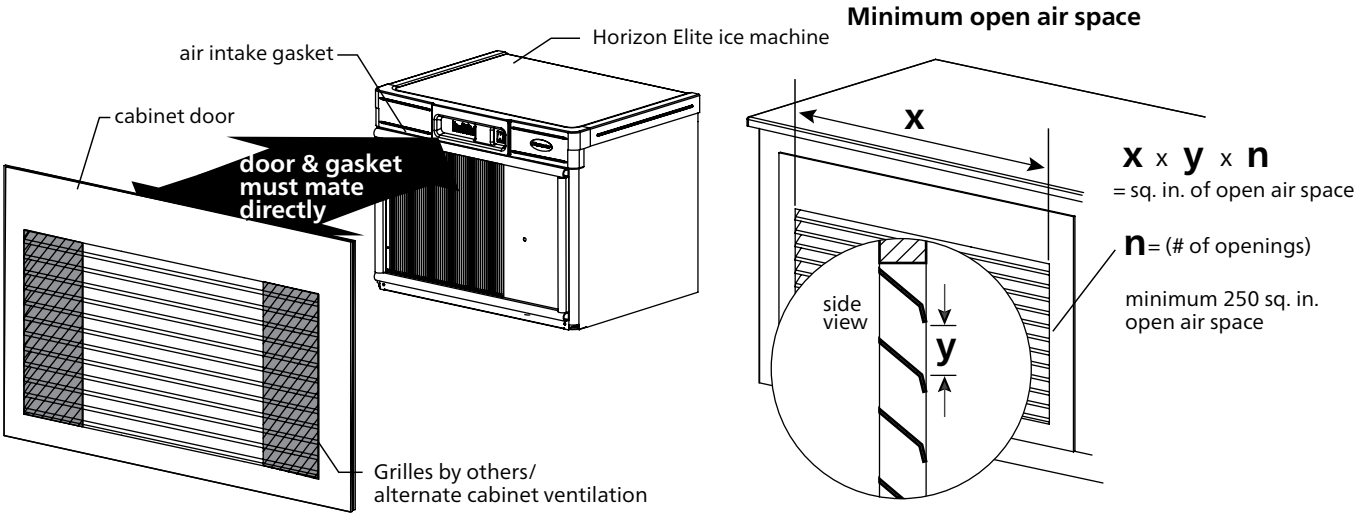

Important specifier notes for using grilles supplied by others/alternate cabinet ventilation

1. Exhaust must be at least 18.00" (45.7 cm) from air intake (exhaust air must not recirculate with intake air).
2. Cabinet interior must be open to allow for unrestricted exhaust air flow.
3. Ice transport tube needs minimum 1/4" per foot (2 cm per meter) pitch toward ice machine and should be secured to prevent dips and traps from forming.
4. Ducting must be provided if cabinet door does not mate directly to air intake gasket.
5. Cabinet interior must provide a minimum clear space of 23.50" (59.7 cm) high by 25.25" (64.1 cm) deep.
6. Grilles by others must meet minimum requirements for open air space shown above.
7. Utilities should be conveniently located as shown.

4 – Horizon Elite ice machine mounting accessories

Optional wall mount bracket	Optional machine stand	Important specifier notes
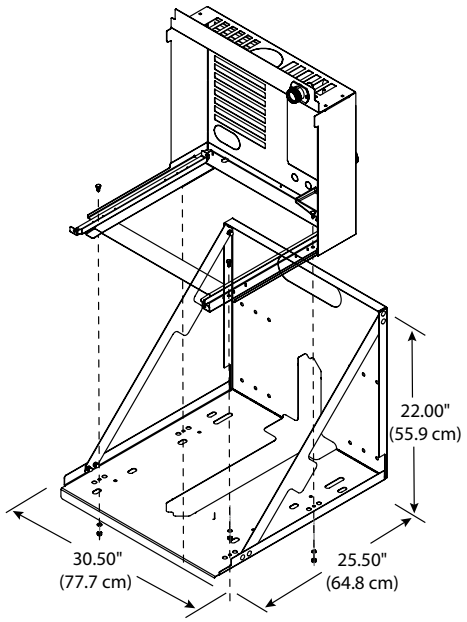	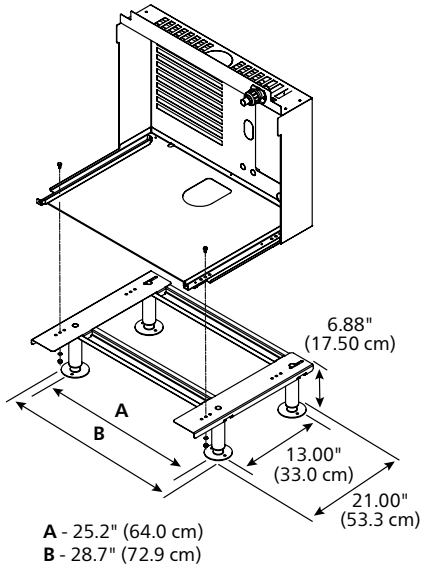	1. For secure wall mounting, specify optional wall mount bracket. 2. Wall and fasteners must support the weight of the ice machine, bracket, supply water and ice. Use of a backing board may be required with hollow wall construction. 3. Machine stand mounting adds 6.88" (17.5 cm) to height of ice machine. 4. No dips in tube routing allowed. 5. Ice transport tube needs minimum 1/4" per foot (2 cm per meter) pitch toward ice machine and should be secured to prevent dips and traps from forming.

5 – Horizon Elite drains - specifier guidelines

Ice machine drain plumbing	Important specifier notes: Where code allows, follow recommendation below.
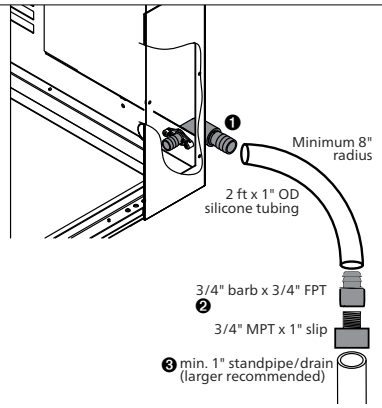	1. Apply Teflon tape to 3/4" male outlet ice machine fitting. Thread on either the provided straight 3/4" barb adapter or a 90 degree adaptor. Connect the supplied 2' (0.61 m) silicone hose to the 3/4" drain barb ❶. 2. It is recommended that the silicone hose be routed down into a 1.5" or 2" standpipe/drain. The minimum drain size for the ice machine is 1". Note: 3/4" to 1" PVC adapter fittings are provided if a larger drain size is not possible ❷ ❸. Note: Minimum 8" radius on silicone drain line. Drain line from the ice machine must have at least 1/4" per foot pitch (6.4 mm/0.3 m). Note: Standpipe/drain provided by others. All other components provided with ice machine.
Chassis drain plumbing – Required	**Important specifier notes: Where code allows, follow recommendation below.**
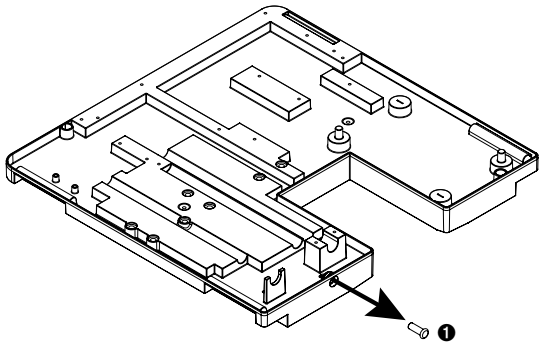	11. Remove white 3/8" plug from rear push-in fitting ❶. 2. Route 3/8" OD drain tubing (preferably copper) through rear of docking station and fully insert into chassis base push-in fitting. Route into drain standpipe. 3. Gravity drain. Ensure 3/8" OD tubing slopes down into drain standpipe without forming a trap.

6 – Horizon Elite ice tube runs - specifier guidelines

Long tube runs for RIDE remote ice delivery equipment

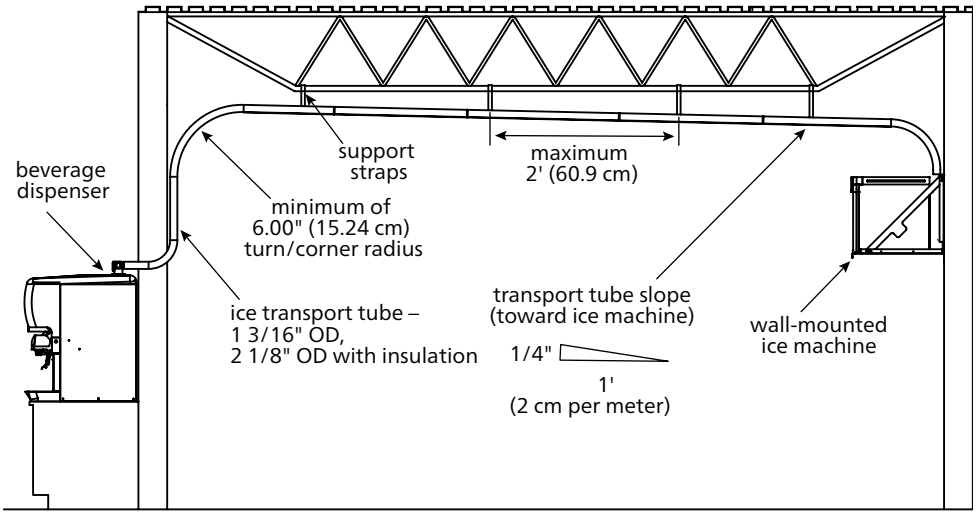

Important specifier notes

1. 75' (22.9 m) maximum ice transport tube run.
2. Tubing routing bends must have a 6.00" (15.24 cm) radius or larger.
3. Dips and traps are not allowed. A 3" (7.62 cm) or larger PVC pipe chase is suggested to support the tubing run. If not supported, secure insulated ice transport tube at least every 2' (0.61 m) to prevent drips and traps.
4. Relative humidity levels above 80% in areas where the ice machine or ice transport tube is located may produce excessive condensation that will cause water damage.
5. Contact factory for recommendations on running tubing through a decorative soffit or chase.

Ice production – Horizon Elite C1010A series

Inlet water temperature F (C)	Ambient air temperature F (C)					
	60 (16)	70 (21)	80 (27)	90 (32)	100 (38)	lb (kg) production in 24 hr
50 (10)	1160 (526)	1061 (481)	962 (436)	825 (374)	688 (312)	
60 (16)	1093 (496)	1001 (454)	909 (412)	795 (361)	681 (309)	
70 (21)	1026 (465)	941 (427)	857 (389)	765 (347)	674 (306)	
80 (27)	971 (440)	893 (405)	815 (370)	730 (331)	644 (292)	
90 (32)	917 (416)	941 (427)	773 (350)	694 (315)	614 (279)	

Agion is a registered trademark of Sciessent LLC.
Open Kitchen is a trademark of Powerhouse Dynamics.
HORIZON ELITE, ICE•DEVICE, ICE MANAGER, ICE PRO, SAFECLEAN PLUS, SANISPONGE, SYMPHONY PLUS and VISION are trademarks of Follett Products, LLC.
CHEWBLET, FOLLETT and RIDE are registered trademarks of Follett Products, LLC, registered in the US.
Follett reserves the right to change specifications at any time without obligation. Certifications may vary depending on country of origin.

1062-20260602 | © Follett Products, LLC

801 Church Lane | Easton, PA 18040, USA
1.800.523.9361 | 1.610.252.7301 | follettice.com