Maestro Plus™ Ice Machine with RIDE™ Technology
Installation Instructions for Ice and Beverage Dispensers

D414AS, E414AS

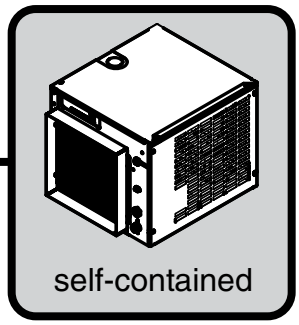

Order parts online
www.follettice.com

Maestro Plus ice machines with RIDE technology fit most countertop dispensers manufactured by

Cornelius • Lancer • SerVend

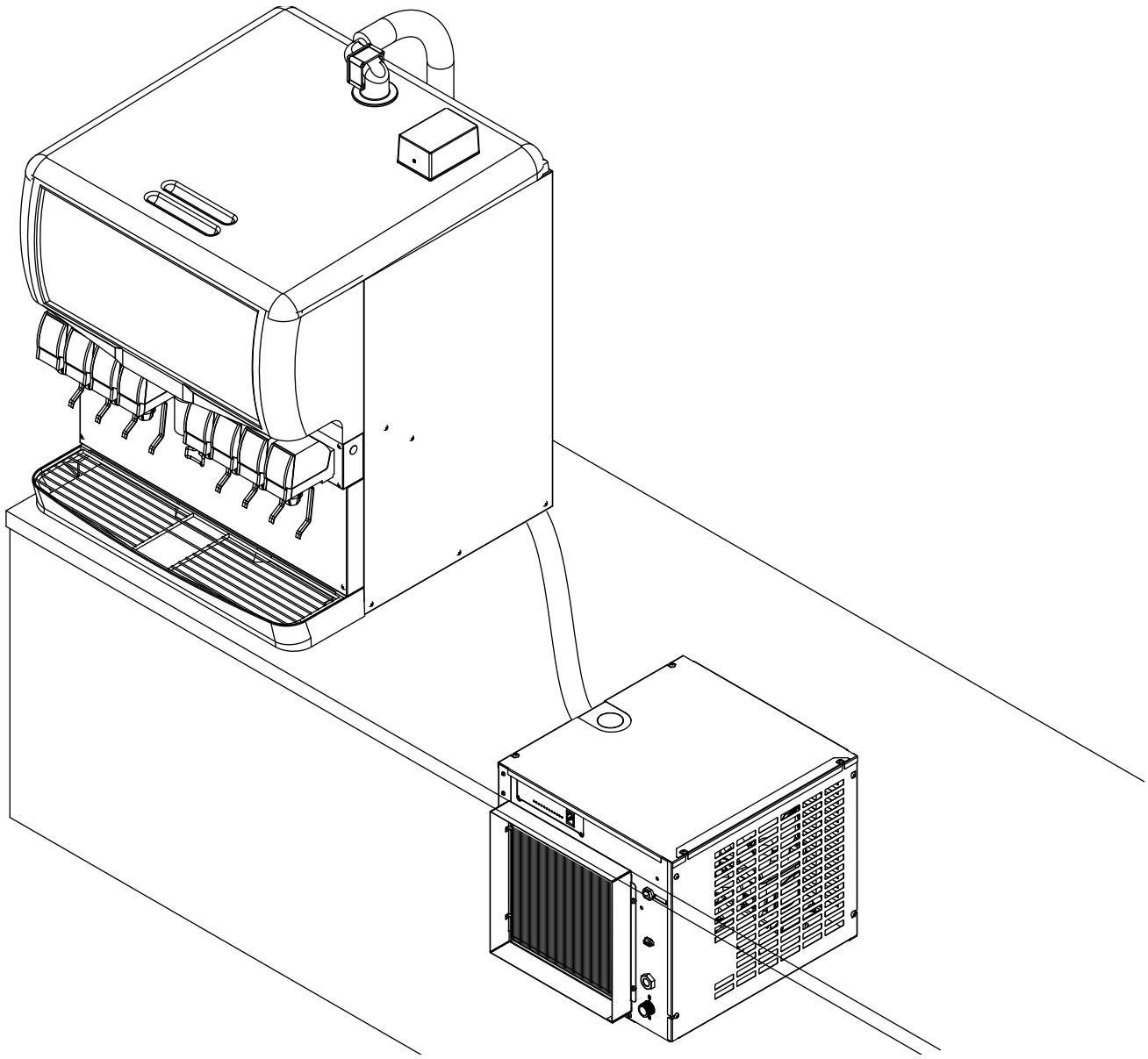

FOLLETT®
801 Church Lane • Easton, PA 18040, USA
Toll free (877) 612-5086 • +1 (610) 252-7301
www.follettice.com

01571322R00

1.1.1 **Caution: Risk of fire.**

1.1.2 **Warning:** Keep ventilaton openings clear of obstruction.

1.1.3 **Warning:** Do not damage the refrigerant circuit.

1.1.4 **Warning:** Connect to potable water supply only.

⚠ CAUTION!

- Do not tilt unit further than 30° off vertical during uncrating or installation.
- Dispenser bin area contains mechanical, moving parts. Keep hands and arms clear of this area at all times. If access to this area is required, power to unit must be disconnected first.
- This appliance is not suitable for installation in an area where a water jet could be used.
- This appliance must not be cleaned by a water jet.
- User maintence should not be done by children.
- Follett recommends a Follett water filter system be installed in the ice machine inlet water line (standard capacity, high capacity, carbonless high capacity).
- Prior to operation clean the dispenser in accordance with instructions found in this manual.
- Do not block air intake or exhaust.
- This appliance should be permanently connected by a qualified person in accordance with application codes.
- A qualified person shall provide a readily accessible disconnect device incorporated into the fixed wiring.
- If the supply cord is damaged, it must be replaced by the manufacturer, its service agent or similarly qualified persons in order to avoid a hazard.
- This appliance can be used by children aged 8 years and above and persons with reduced physical, sensory, or mental capabilities, or lack of experience and knowledge if they have been given supervision or instruction concerning use of the appliance in a safe way and understand the hazards involved. Children should be supervised to ensure that they do not play with the appliance.
- This appliance is designed for commercial use.
- WARNING! To avoid a hazard due to instability of the appliance, it must be fixed in accordance with the instructions.
- Warranty does not cover exterior or outside installations.
- To reduce risk of shock, disconnect power before servicing.
- Connect to potable water supply only.
- Ice is slippery. Maintain counters and floors around dispenser in a clean and ice-free condition.
- Ice is food. Follow recommended cleaning instructions to maintain cleanliness of delivered ice.

Contents

Unpack **4**
Unpack Ice Machine 4
Site Preparation **5**
Installation site requirements 5
Dispenser Top Preparation **6**
Top Preparation 6
Mount thermostat box 6
Install shuttle actuator and bracket 7
Route thermostat 7
Mount Ice Machine **8**
Ice machine in cabinet 8
External Connections **10**
Air-cooled ice machines only 10
Water-cooled ice machines only 10
Bin thermostat Cable 10
Dispenser Agitation Adjustment **11**
Agitation adjustments - CORNELIUS 11
Agitation adjustments – LANCER 4500 SERIES 11
Agitation adjustments – LANCER FS SERIES 12
Agitation adjustments – SERVEND 12
Dispenser diverter plate overview – CORNELIUS, ED, DF AND DB SERIES (installation on next page) 13
Dispenser diverter plate installation – CORNELIUS, ED, DF AND DB SERIES 14
Transport tube installation **15**
General requirements 15
Procedure 15
RIDE model ice machine start up procedure **16**
Before turning on power 16
After turning on power 16

1. Unpack

Carefully unpack and inspect the contents of your Follett ice machine.

1.1 Unpack Ice Machine

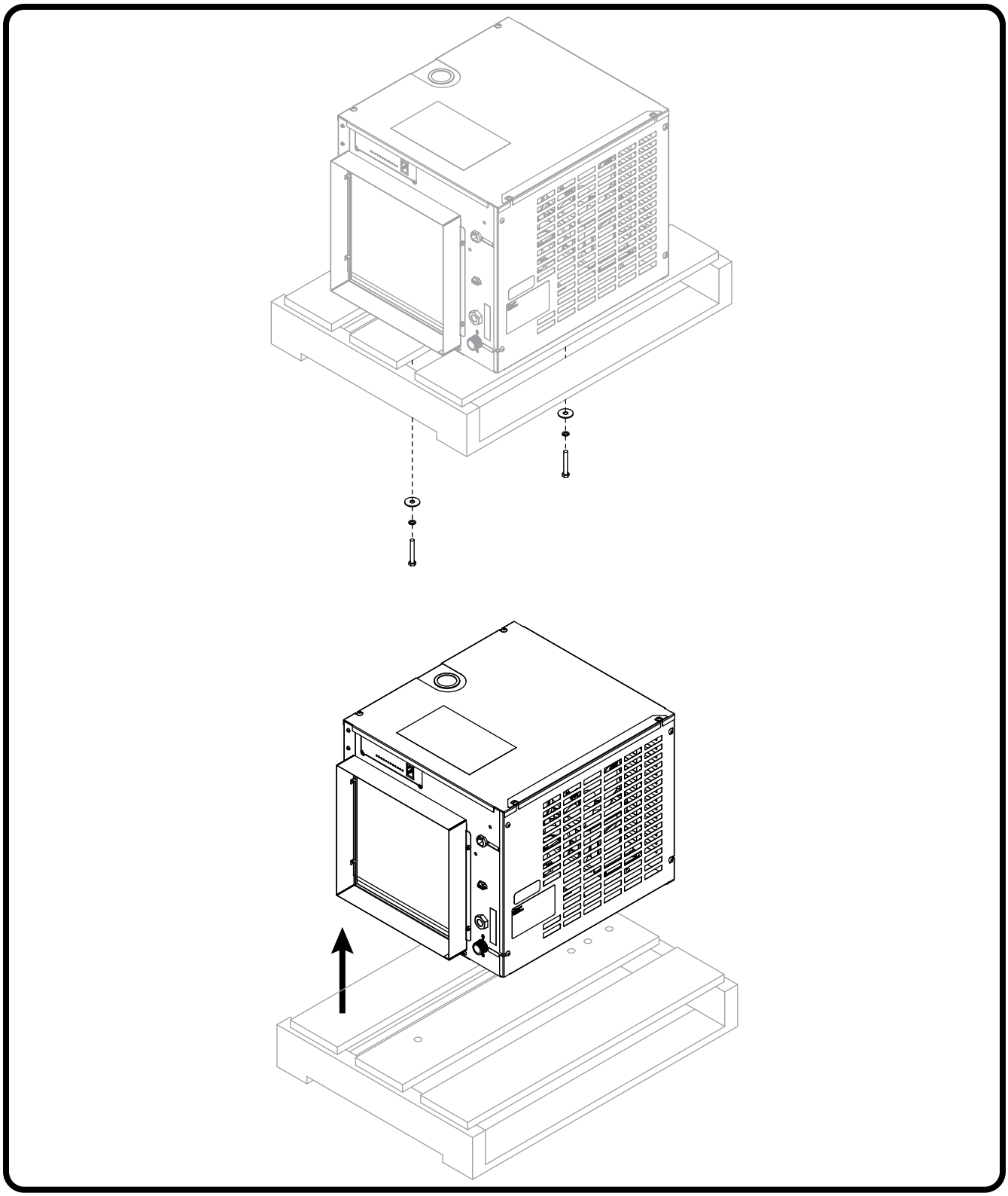

2. Site Preparation

Provide drainage, potable water supply and electrical power to within 6 feet (2m) of ice machine in accordance with local and national codes. Outdoor installation is not recommended and will void warranty.

2.1 Installation site requirements

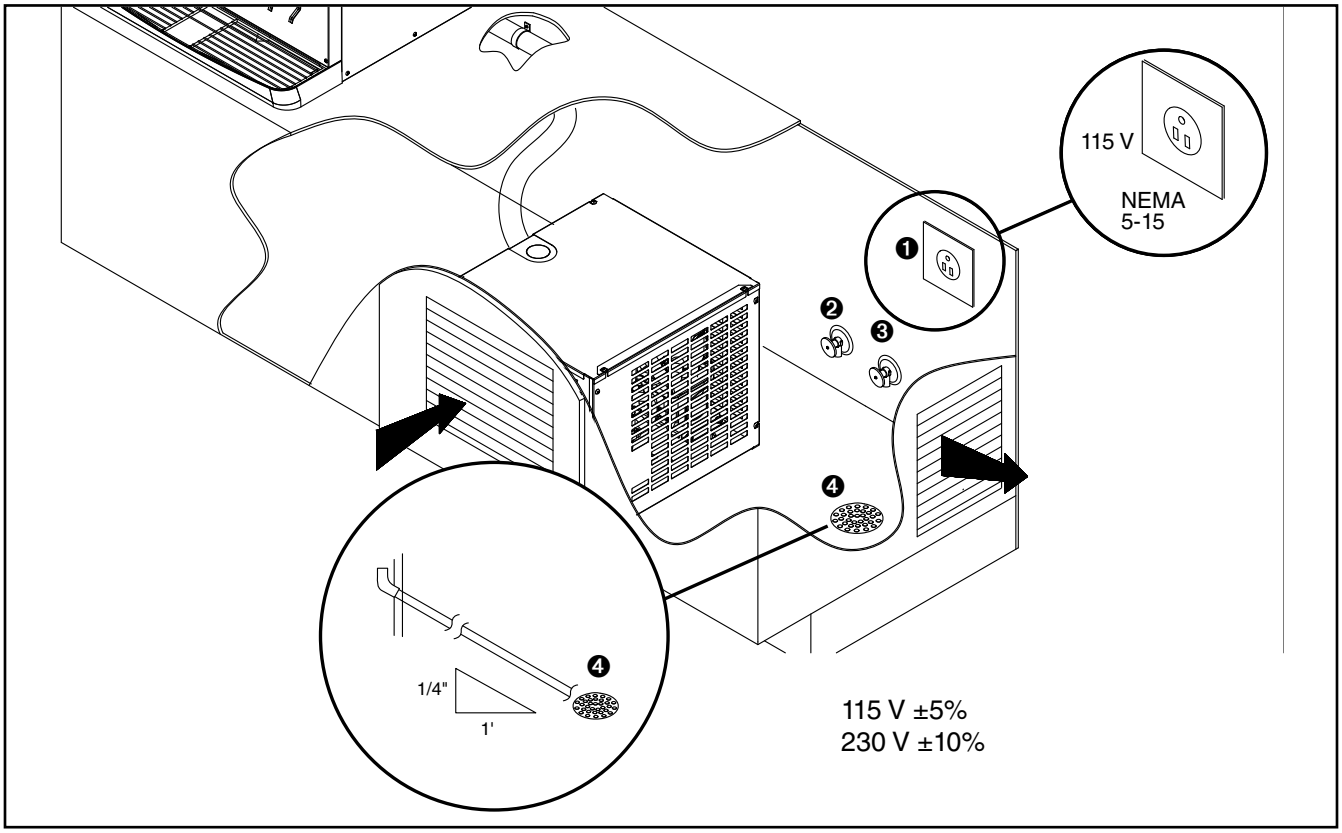

Electrical ❶

WARNING!

- This appliance should be connected by a qualified person in accordance with application codes.
- If the supply cord is damaged, it must be replaced by the manufacturer, its service agent or similarly qualified persons in order to avoid a hazard.

D414AR 115/60/1 (115 V ±10%) 15A breaker
(Requires a 15A dedicated circuit)

E414AR (230/50/1 - 5.5A (full load)
(Requires a dedicated circuit, 1.50 mm^2 wire)

Potable Water Supply ❷

10 psi to 70 psi (69 kpa to 483kpa)

45 F to 90 F (7 C to 32 C)

Condenser water supply for water-cooled systems ❸

10 psi min.; 125 psi max. (69 kpa min.; 862 kpa max.)

20 F to 90 F (–7 C to 32 C)

0.5 gallons (1.9 liters) per minute

Drain ❹

The drain line from the ice machine must have at least 1/4 in. per foot (6,4 mm/0,3 m) pitch

3. Dispenser Top Preparation

Prepare the dispenser.

Note: The instructions below only apply to 22” & 30” wide dispensers. 44” wide dispenser instructions may be found with the top kit.

3.1 Top Preparation - Thermostat (if applicable)

Standard (Cornelius, Lancer, or Servend)

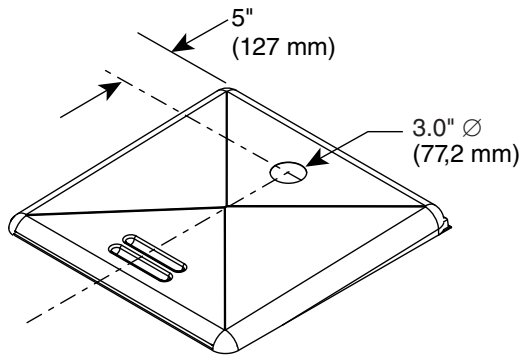

- Locate hole position 5" (127 mm) from back of dispenser top.

Lancer Sensation and Touchpoint

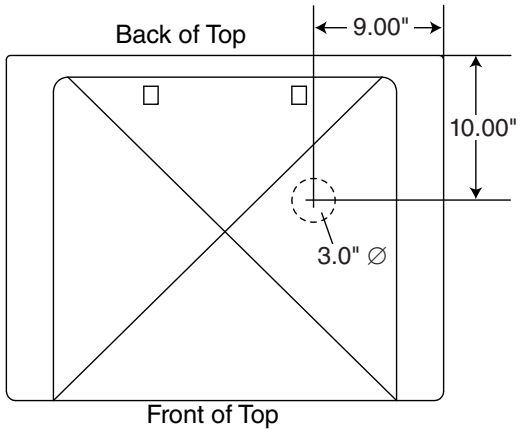

- Locate hole position 10" (254 mm) from back and 9" (229 mm) from right of dispenser top.

3.1.1 Mount thermostat box

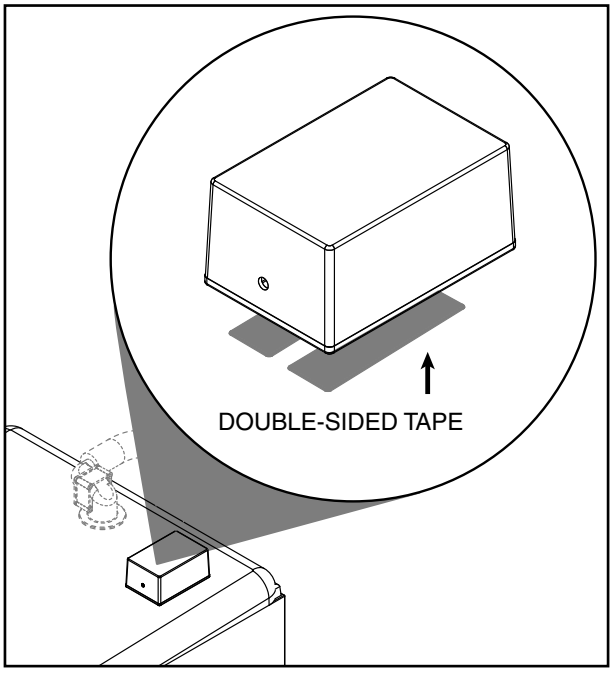

- Apply double-sided tape to bottom of thermostat box and mount box on bin.

3.1.2 Install shuttle actuator and bracket

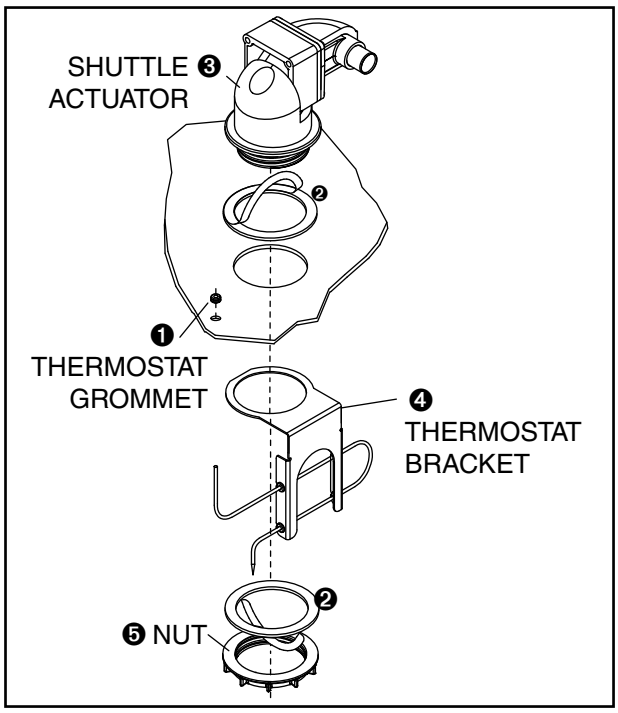

- Install thermostat grommet ❶.
- Remove protective tape and apply gaskets ❷ to shuttle actuator and nut.
- Place shuttle actuator in hole ❸.
- Install thermostat bracket ❹ and nut ❺. Ensure that nut captures the thermostat bracket, then hand tighten.

3.1.3 Route thermostat

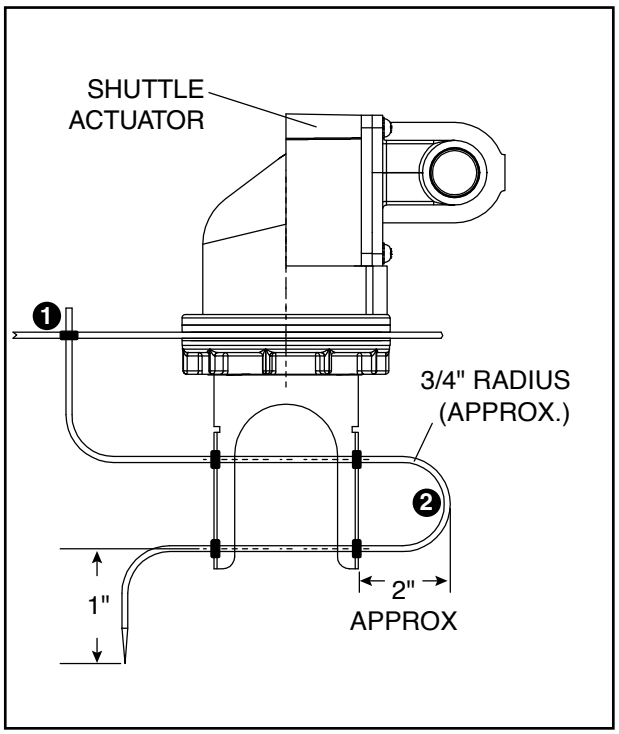

- Route thermostat through grommet and into bin ❶.
- Secure thermostat in bracket ❷.

3.2 Top Preparation - Shuttle Actuator (if applicable)

Standard (Cornelius, Lancer, or Servend)

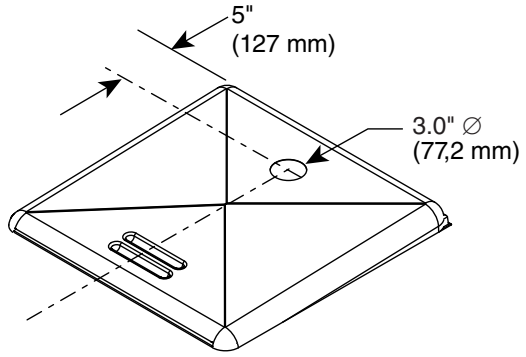

- Locate hole position 5" (127 mm) from back of dispenser top.

Lancer Sensation and Touchpoint

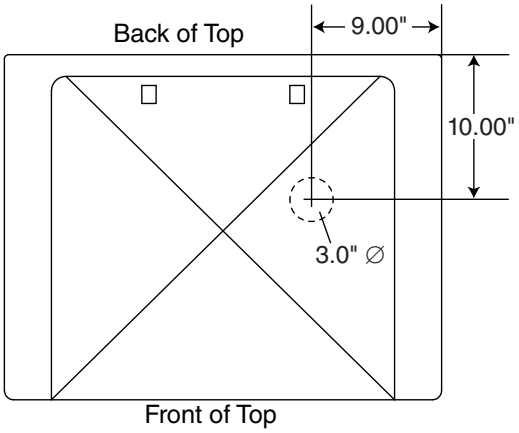

- Locate hole position 10" (254 mm) from back and 9" (229 mm) from right of dispenser top.

3.2.1 Install shuttle actuator

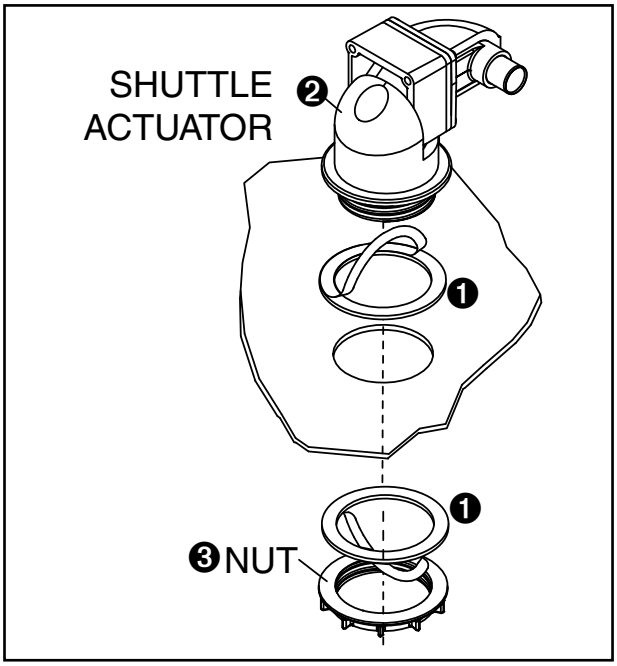

- Remove protective tape and apply gaskets ❶ to shuttle actuator and nut.
- Place shuttle actuator in hole ❷.
- Install nut ❸ and hand tighten.

4. Mount Ice Machine

Mounting options: Cabinet, Wall, Stand

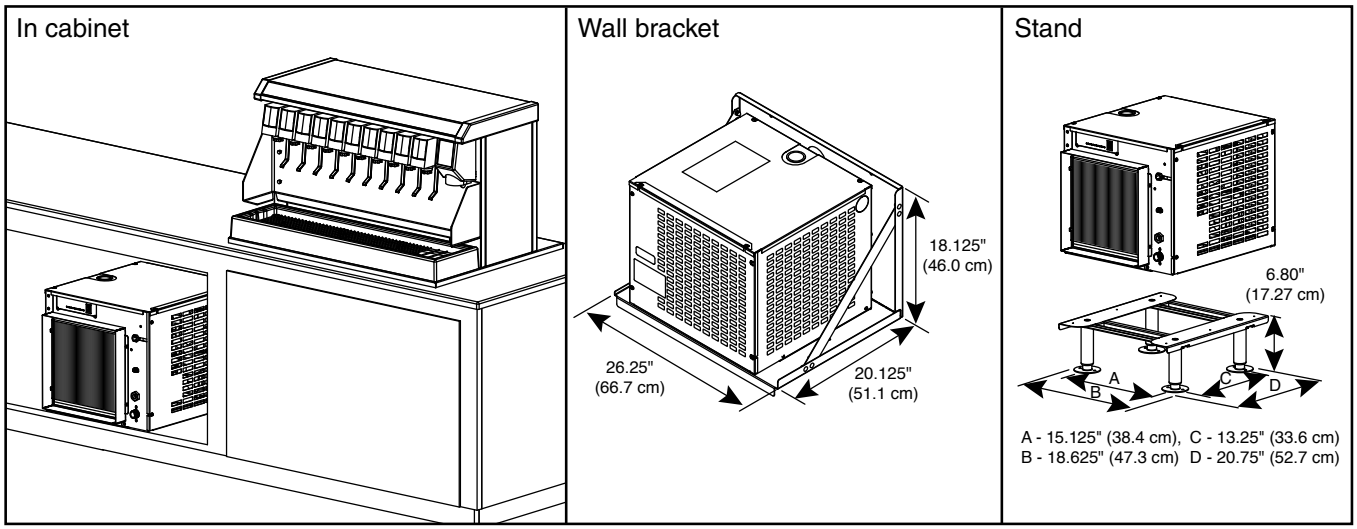

4.1 Ice machine in cabinet

Maestro ice machines can be installed undercounter/in-cabinet to fill bins or dispensers using RIDE technology. Care must be taken to ensure proper cabinet venting to avoid recirculation of hot air. Improper venting can cause ice machine outages.

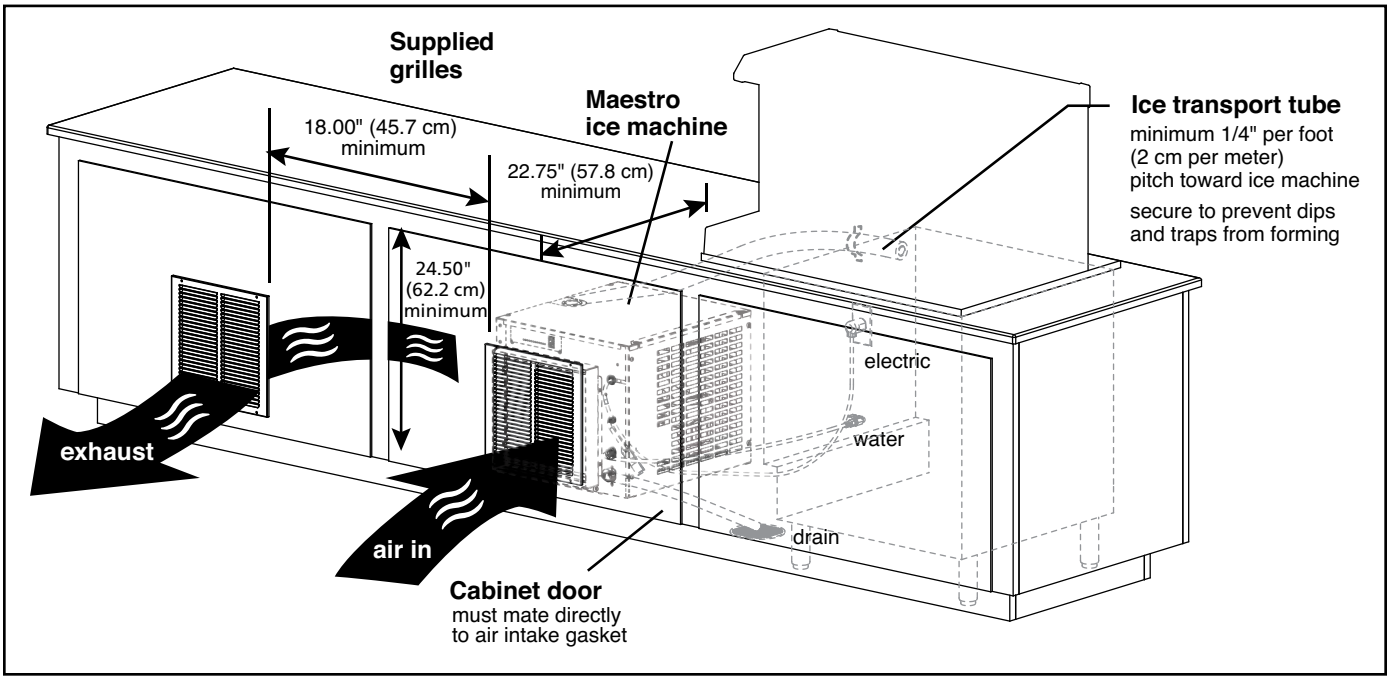

- The supplied exhaust grille must be located at least 18" (46 cm) from the supplied air intake grille (exhaust air must not recirculate with intake air).
- Cabinet interior must be open to allow for unrestricted exhaust air flow.
- Ice transport tube needs minimum 1/4" per foot (2 cm per meter) pitch toward ice machine and should be secured to prevent dips and traps from forming.
- Cabinet door must mate directly to air intake gasket.
- Cabinet interior must provide a minimum clear space of 22.75" deep (57.8 cm) by 29" high (74 cm).

Note: 25.75" (65.4 cm) required for plug removal if receptacle located directly behind unit.

- Cutout for supplied grilles must meet minimum size requirements shown above.
- Utilities should be conveniently located as shown.

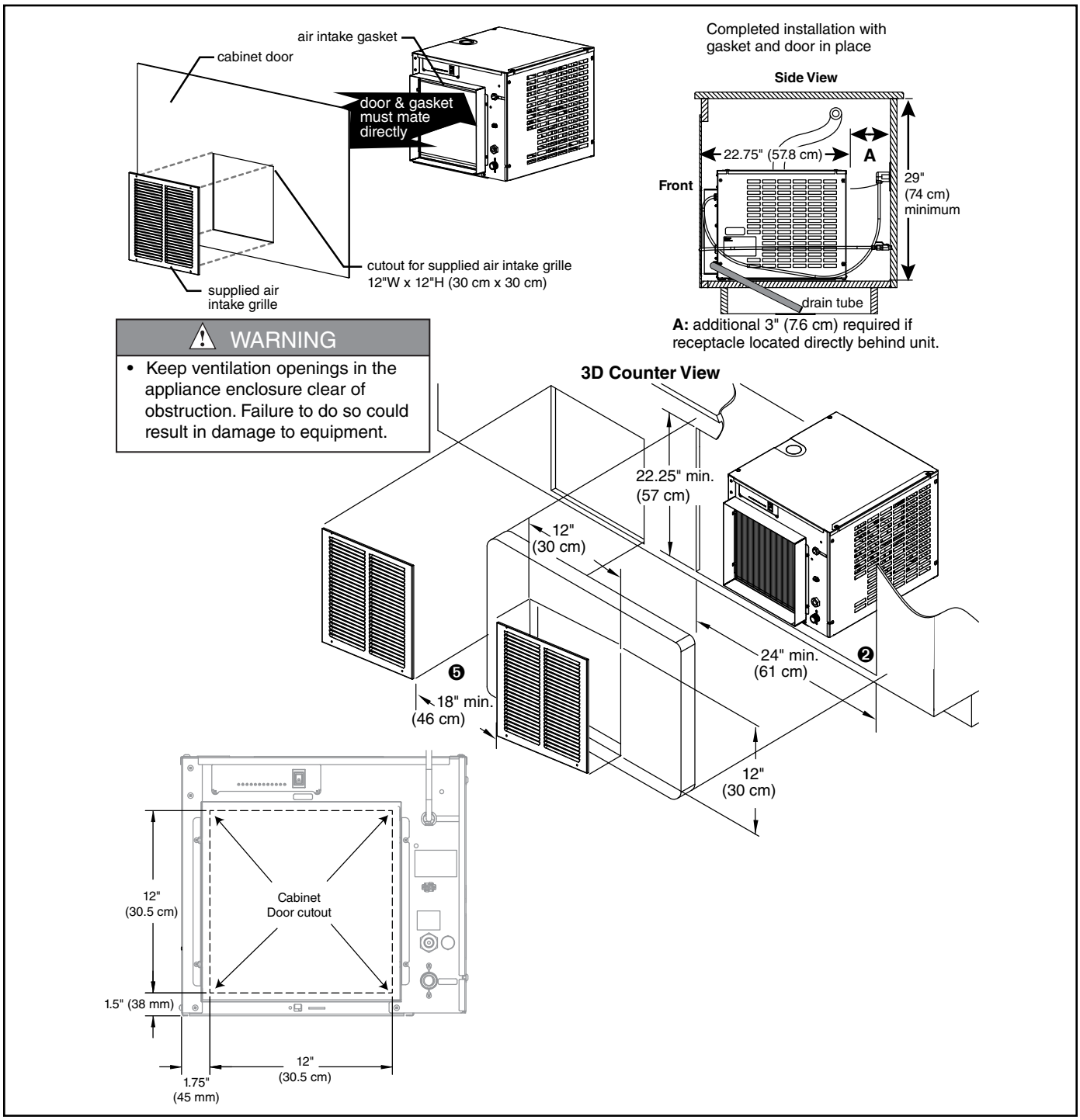

- Intake and Exhaust Grille Placement: air-cooled models only
  - Position the intake grille cut out in the access panel/door

Note: Ice machine must be aligned with cut out and inside of access panel to provide a tight seal and prevent recirculation of hot exhaust air.

  - Left edge of cutout should be 1.75" (4.5 cm) from the left side of the ice machine ❸
  - Bottom edge of cutout should be 1" (2.5 cm) from the bottom of the ice machine ❹
  - Position supplied exhaust grille at least 18" (46 cm) away from intake grille ❺. Where possible, install exhaust grille to the rear or side of the base cabinet.
  - If not using supplied grille, air circulation requirements must be met: 160 sq. in (1032 sq cm) intake/exhaust air.

5. External Connections

5.1 Air-cooled ice machines

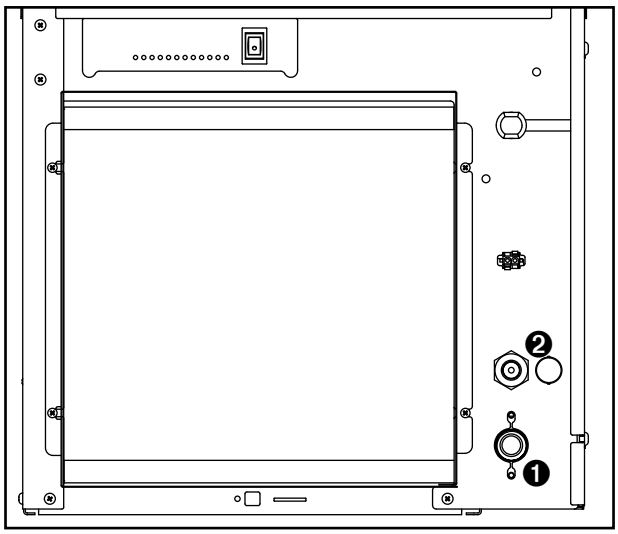

- Install drain line ❶ (3/4" MPT).
  The rigid drain line from the ice machine must have at least 1/4" per foot (6,4 mm/0,3 m) pitch.
- Install ice machine potable water supply ❷ (3/8" FPT).

Note: Follett recommends a Follett water filter system be installed in the ice machine inlet water line (standard capacity, high capacity, carbonless high capacity).

5.2 Bin Thermostat Cable (if applicable)

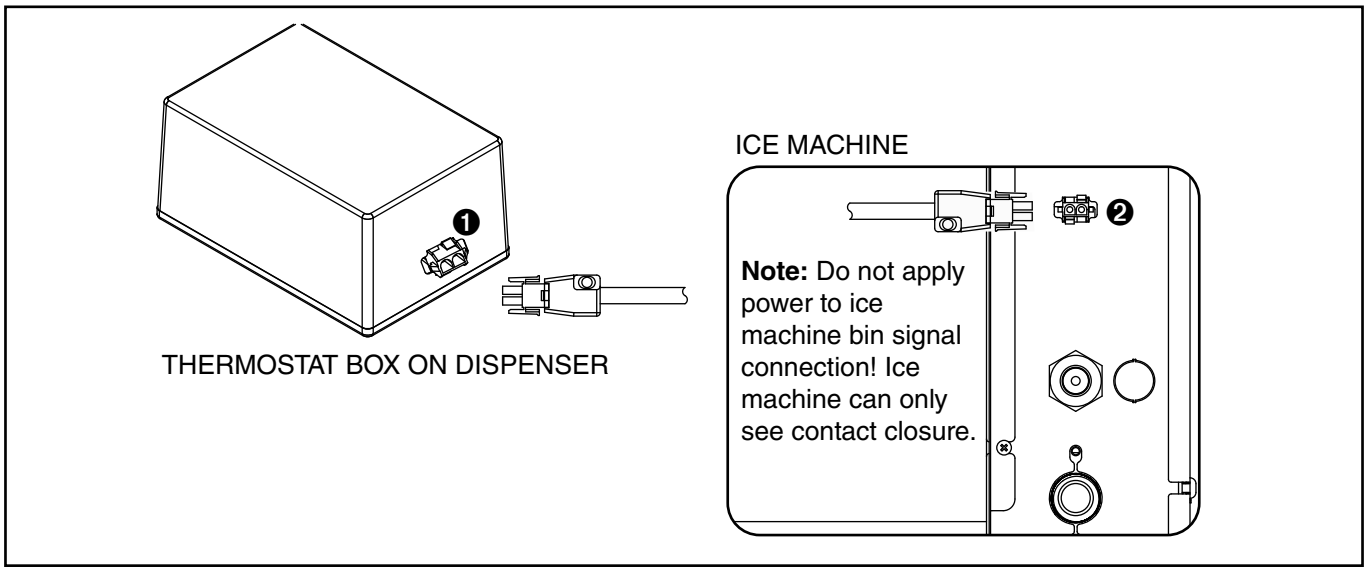

- Connect 2-pin bin thermostat cable at thermostat box on dispenser and at front of ice machine.

6. Dispenser Agitation Adjustment

6.1 Agitation adjustments - CORNELIUS

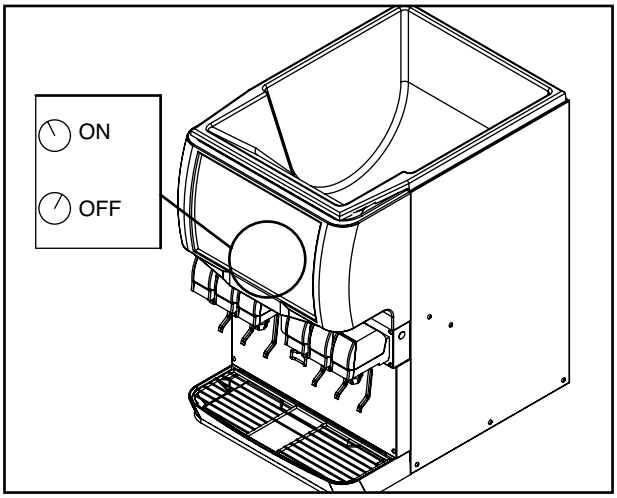

Cornelius models ED, DB, DF, IDC and Flavor Fusion

- Adjust the agitation tier located on the Cornelius PC board to 1 second on, 1 hour off.

Note: see Cornelius manual for more information.

6.2 Agitation adjustments – LANCER 4500 SERIES

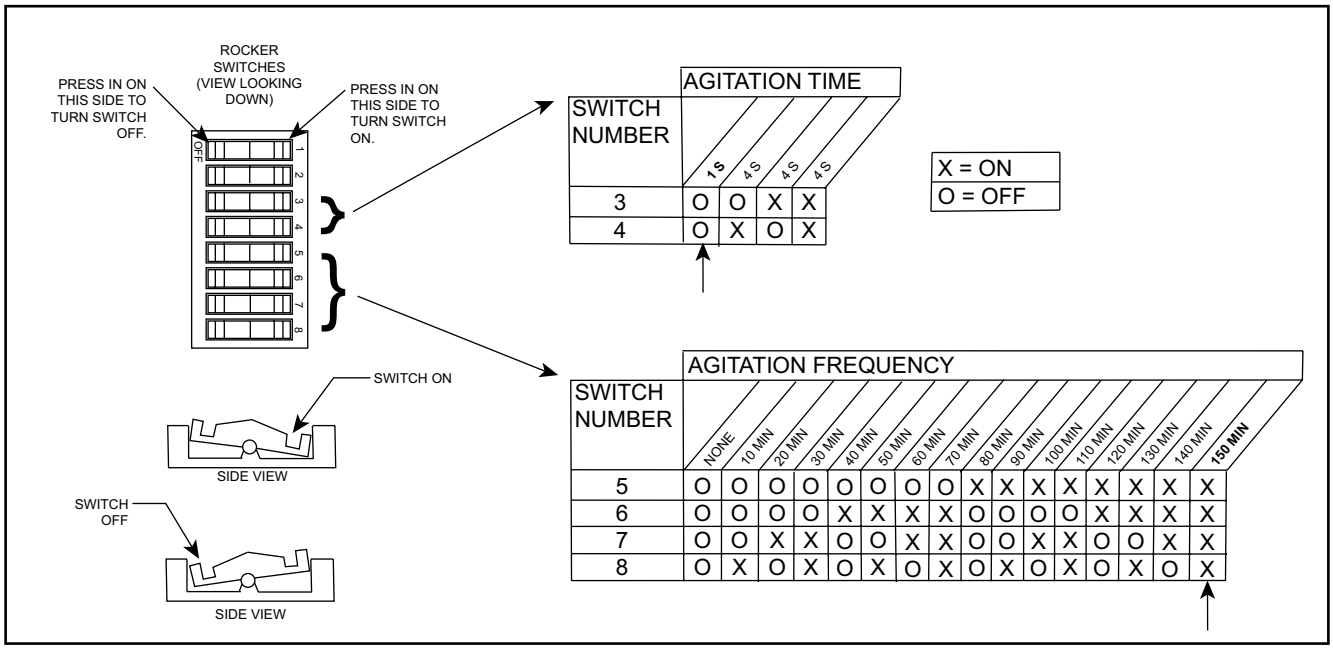

SWITCH NUMBER	AGITATION TIME 1S	4S	4S	4S
3	O	O	X	X
4	O	X	O	X

X = ON
O = OFF

SWITCH NUMBER	NONE	10 MIN	20 MIN	30 MIN	40 MIN	50 MIN	60 MIN	70 MIN	80 MIN	90 MIN	100 MIN	110 MIN	120 MIN	130 MIN	140 MIN	**150 MIN**
5	O	O	O	O	O	O	O	O	X	X	X	X	X	X	X	X
6	O	O	O	O	X	X	X	X	O	O	O	O	X	X	X	X
7	O	O	X	X	O	O	X	X	O	O	X	X	O	O	X	X
8	O	X	O	X	O	X	O	X	O	X	O	X	O	X	O	X

Lancer 4500 series only

Adjust the agitation time to 1 second, and the agitation frequency to 150 minutes. See Lancer manual for more information.

6.3 Agitation adjustments – LANCER Sensation and Touchpoint

No agitation adjustment required.

6.4 Agitation adjustments – LANCER FS SERIES

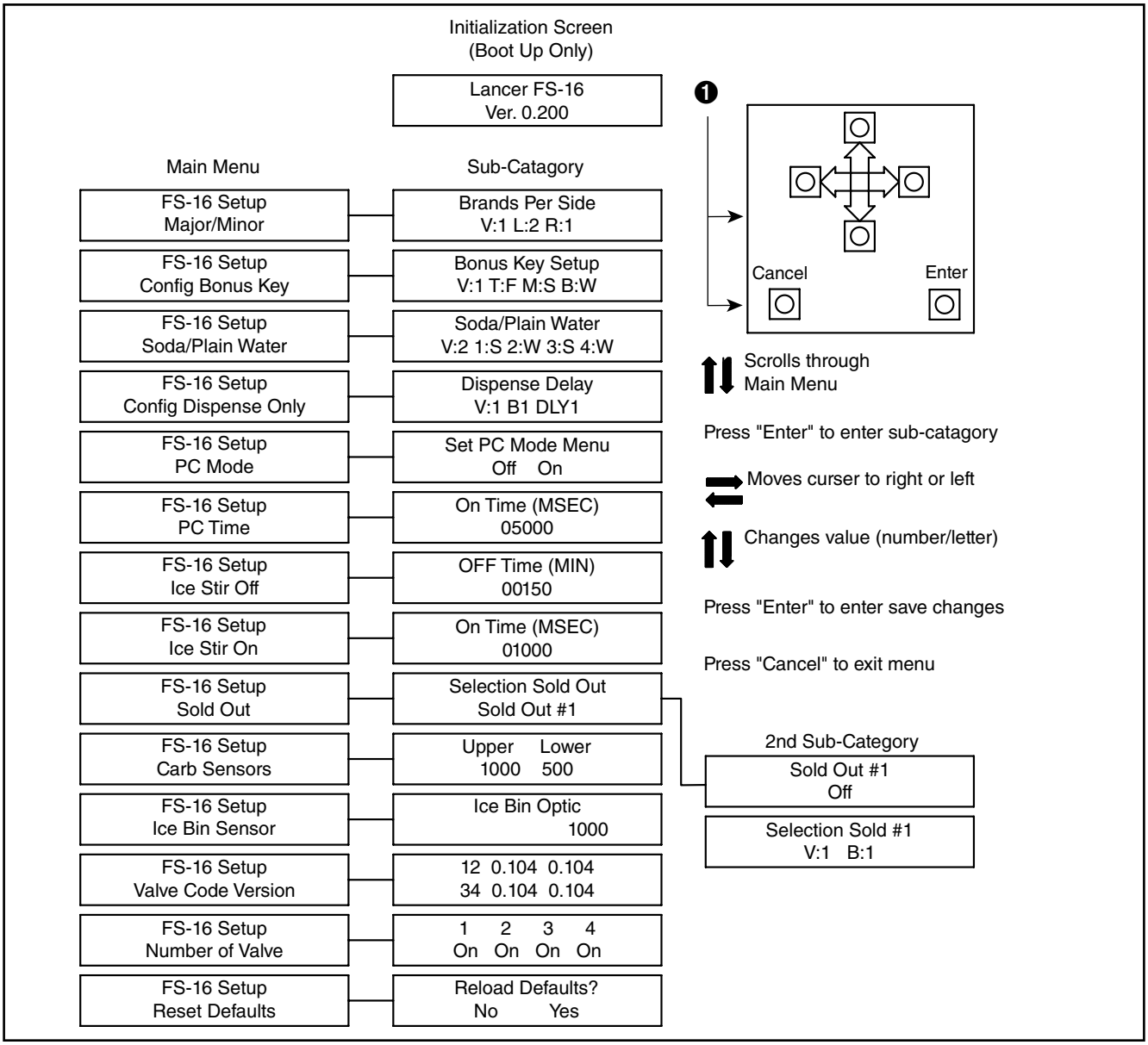

Lancer 4500 series only

- Hold down “cancel” and “left button” to get to hidden menu ❶.
- Type in code 6655.
- Type in 150 minutes of off time and 1000 milliseconds (1 second of time) as the preferred setting.

Note: see Lancer manual for more information.

6.5 Agitation adjustments – SERVEND

Lancer 4500 series only

No agitation adjustment required.

6.6 Dispenser diverter plate overview – CORNELIUS, ED, DF AND DB SERIES (installation on next page)

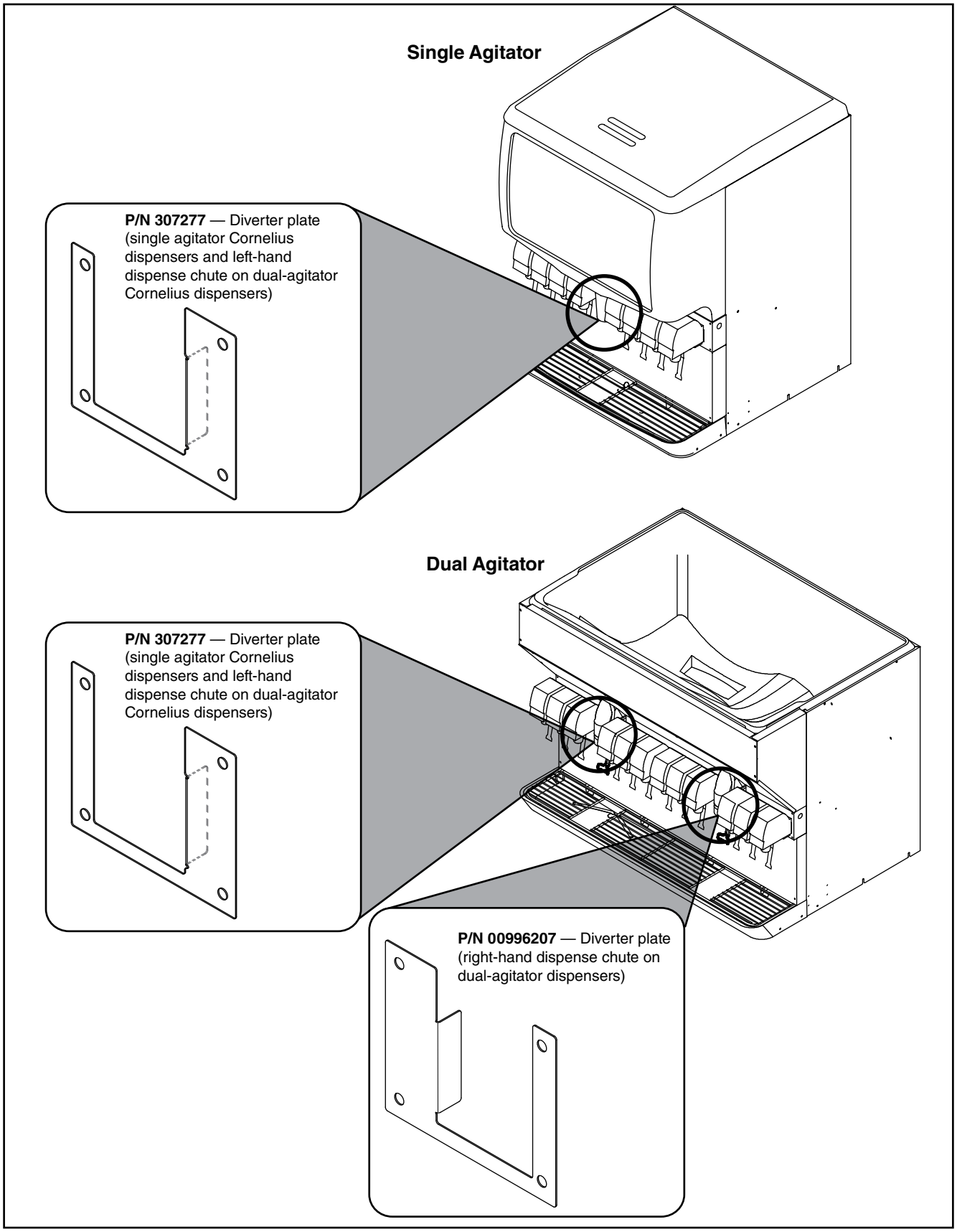
Single Agitator
P/N 307277 — Diverter plate (single agitator Cornelius dispensers and left-hand dispense chute on dual-agitator Cornelius dispensers)
Dual Agitator
P/N 307277 — Diverter plate (single agitator Cornelius dispensers and left-hand dispense chute on dual-agitator Cornelius dispensers)
P/N 00996207 — Diverter plate (right-hand dispense chute on dual-agitator dispensers)

6.7 Dispenser diverter plate installation – CORNELIUS, ED, DF AND DB SERIES

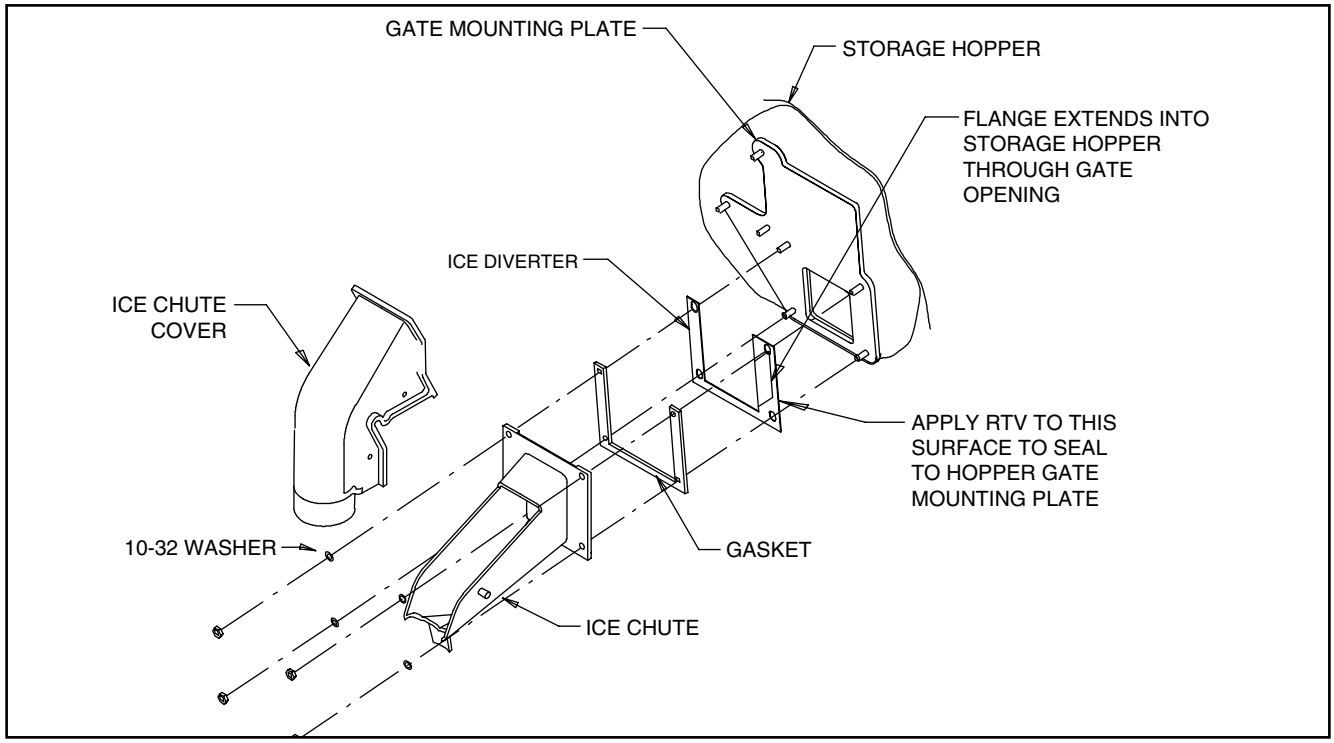

CORNELIUS ED, DF AND DB series only

These dispensers require the installation of an ice diverter at the dispenser opening:

- Disassemble chute assembly
- Discard factory restrictor plate
- Replace with alternate diverter plate (supplied)

Cornelius IDC and Flavor Fusion

These dispensers require modifications for compatibility with Chewblet ice. Agitation times must be set to 1 second ON, 1 hour OFF and the ice restrictor plate must be adjusted to the fully open position. See your beverage supplier for these modifications.

Note: IDC and Flavor Fusion must be nugget-ready. Please contact beverage supplier for installation of ice slide.

7. Transport tube installation

Incorrect ice transport tube installation can result in wet ice and dispensing problems. Follow guidelines below to ensure correct installation. Call factory for assistance if you are unable to meet these requirements.

7.1 General requirements

- Maximum length of tube run – 20 ft (6 m). Factory approval required for longer runs.
- Run tube without dips.
- One continuous length of tube; no splices.
- Minimum radius of bends in tube – 6" (15.3 cm) inside radius.
- Maximum number of bends – 6.
- Insulation on entire run of ice tube.

7.2 Procedure

1. Install supplied insulation on entire length of tube.
2. Remove ice machine top panel.
3. Select side, rear or top knockout in ice machine cabinet for tube entrance and install bushing.
4. Run insulated tube without dips between dispenser and ice machine and secure in place.
5. Slide end of transport tube and insulation through bushing and run to nozzle.
6. Cut tube to that length.
7. Pull insulation back and slip supplied hose clamp over end of transport tube.
8. Heat end of transport tube in cup of 160 F (71 C) hot water to soften ❶ and spread with pliers ❷ before making connection to ease assembly.
9. Push transport tube onto nozzle ❸.
10. Position clamp behind lip on nozzle and tighten clamp.

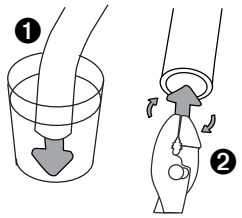

Heat end of transport tube in cup of 160 F (71 C) hot water to soften (**1**) and spread with pliers before making connection (**2**).

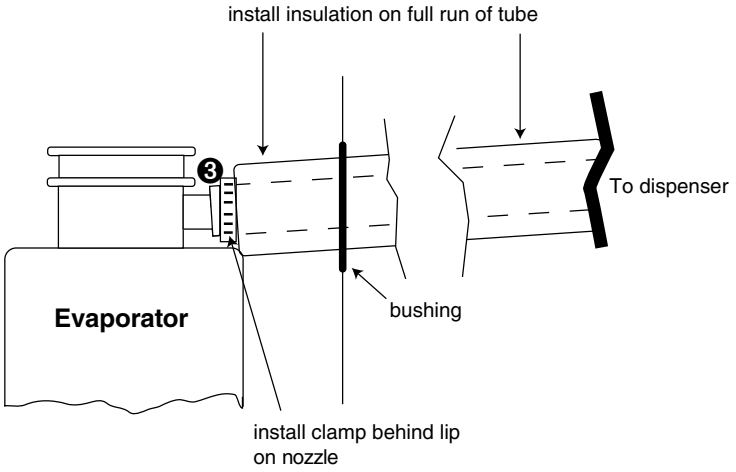

8. RIDE model ice machine start up procedure

The start-up procedure below is intended to ensure that ice machine is operating properly after installation has been made. Check each item listed and call factory immediately for assistance if you experience problems with unit.

⚠ NOTICE!

- Ice machine MUST be sanitized prior to operation!
- Consult Operation and Service Manual provided with ice machine for sanitizing instructions.

8.1 Before turning on power

1. Turn on water to ice machine.
2. Check that hose clamp securely holds ice transport tube on evaporator port.

8.2 After turning on power

1. Turn on power to ice machine and confirm that gearmotor, fan motor and compressor start immediately.
2. Check that ice begins to enter dispenser bin area within approximately 10 minutes.
3. Put ice against bin level thermostat in dispenser bin and check that compressor and gear motor shut down immediately after thermostat opens. Fan will continue to run for an additional 10 minutes.
4. Check that ice machine comes back on in approximately 20 minutes (bin signal must be present).

Maestro Plus is a trademark of Follett Products, LLC.
Follett, Chewblet and RIDE are registered trademarks of Follett Products, LLC, registered in the US.

801 Church Lane • Easton, PA 18040, USA
Toll free (877) 612-5086 • +1 (610) 252-7301
www.follettice.com

01571322R00
© Follett Products, LLC 11/24