IM-Series Installation & Service Manual
Air & Water Cooled Cubers

IM-Series Cuber

ICE SHAPE: Cube & Half Cube

Cube

$^{7}/_{8}$"x $^{7}/_{8}$"x $^{7}/_{8}$"

Half Cube

$1^{1}/_{8}$"x $^{3}/_{8}$"x $^{7}/_{8}$"

Series Models

30” WIDE

AIR COOLED

IM-0350-AH/C
IM-0460-AH/C
IM-0550-AH/C
IM-0750-AH/C
IM-1100-AH/C

WATER COOLED

IM-0460-WH/C
IM-0550-WH/C
IM-1100-WH/C

22” WIDE

AIR COOLED

IM-0350-AH/C
IM-0460-AH/C
IM-0550-AH/C

All equipment leaves our distribution points in new condition.

When receiving new equipment, please pay close attention to the packaging for any damage to the crating. If there appears to be any exterior damage, please either note the damaged on the delivery bill of lading OR refuse it.

Failure to note damage on BOL or refuse damaged equipment means that the receiver accepts all liability for damaged equipment.

Damage

Receiving & Unpackaging Equipment

Installation, Start Up, and Check

Please double check these items before install & start-up before calling for service.

(These items are not covered under your Labor Warranty)

1. Has all tape and packing materials been removed from Machine?
2. Is the unit installed in a location that is away from heat generating equipment or direct sunlight?
3. Is the unit level front to back and side to side? Adjustable legs on bins and dispensers make this quick and easy.
4. Is the correct electrical power provided? Ensure the unit has the specified voltage and amperage and is on a dedicated circuit. Do not use a drop cord or power strip with any ice machine. This could cause a voltage drop and compensatory amperage spike or cause the circuit breaker to trip.
5. Check drain line pipe sizes. Insure they are ¾ inch and line drops ¼ inch per foot of run to insure both machine and bin drainage is effective.
6. Is water supplied to the unit? Water Line size, 3/8 inch, must be supplied to ensure sufficient water flow is always available. Required water pressure is 20 psi minimum and 80 psi maximum. This unit is designed to work with water temperatures of 50°F - 90°F.
7. Is the unit installed in an area with sufficient ventilation at the back for proper rejection of condenser heat? The manufacturer requires 8" of clearance at the back & sides of the unit. Twelve (12") inches is required at the top of unit. Fresh air is taken in from the back and dispelled from the top and sides. Never block the top air vents!
8. This unit is designed to work in ambient air temperatures of 50°F - 100°F.
9. Is the Unit located in an area which has air borne particulate (flour, yeast, etc) that can build mold and bacteria inside the machine or clog the filter and condenser? There are products that can be installed to help these problems.
10. Scale or Mold build-up can affect the sequence of operation, timing and production. Is a water filter installed? We recommend our exclusive Citryne Pro Ice Filtration for the best scale clean results. Scale will increase operating costs and reduce or shut down the machine's performance.
11. Do not install this unit outdoors.
12. **If you are installing an ice maker on top of an existing bin, check the bin to it insure it has a baffle in the bin to keep ice from coming out of the bin door.**
13. **If you are installing the ice maker on top of a dispenser, the dispenser manufacturer must provide the top kit to prevent leaks and bin problems. Additionally, a Follett thermostat kit is required (ITS -150-KIT).**

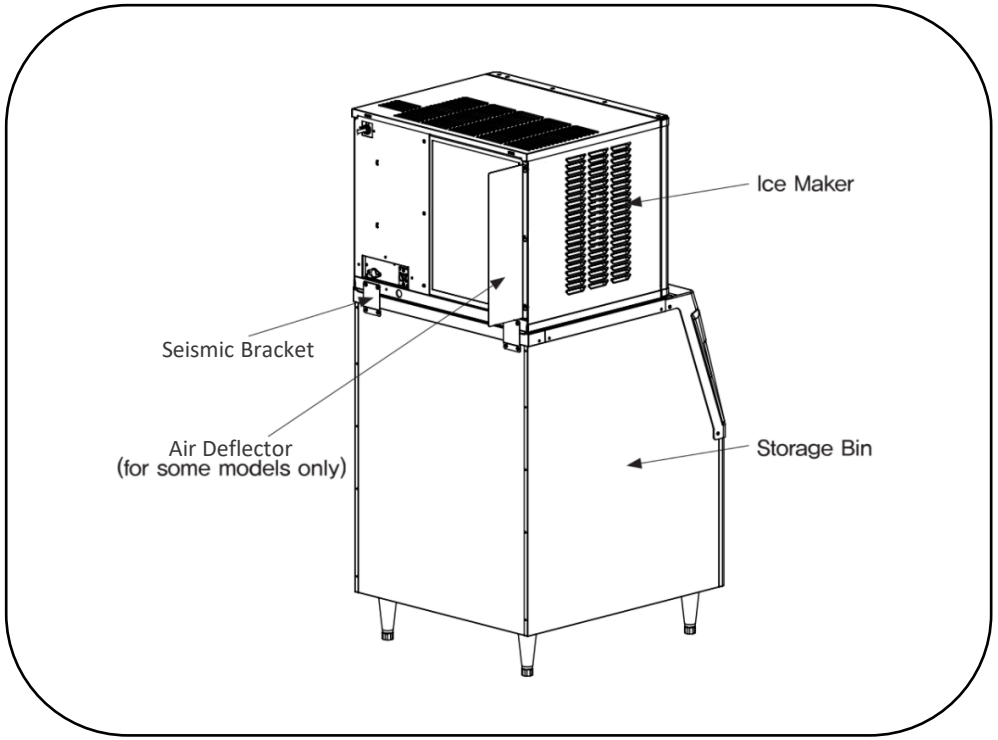

Install machine on an ice storage bin and ensure both are level to eliminate improper operation.

Additionally, it is recommended to use the supplied seismic brackets to secure the ice machine and bin together.

An air deflector is included with self-contained, air-cooled models to prevent exhausted air from returning back to the condenser.

Proper Installation
IM-Series

Ensure the ICE-OFF-WASH switch is set to ‘ICE’.

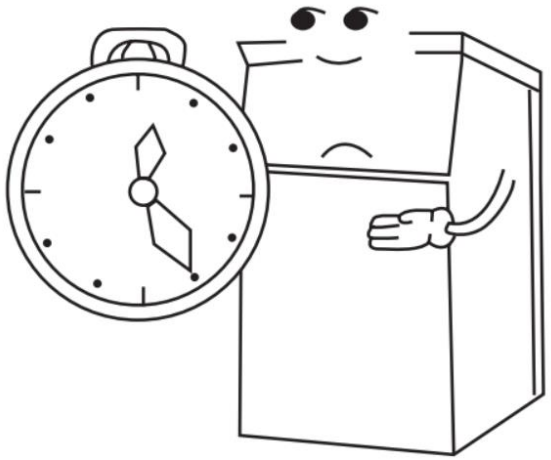

Ice will begin to drop into the ice storage bin after 10-15 minutes.

The size of your ice storage bin, plus the ambient & water temps will Determine how long it will take to fill the bin.

Proper Installation
IM-Series

Locating the data plate.

When taking a call for service, the first thing you want to do is obtain the model and serial number to the machine. This is not only important for warranty purposes but, in some cases, in determining which part to supply to the customer.

Doing so will help eliminate any mistakes or handwriting illegibility down the road.

IM-Series 30” Wide Models

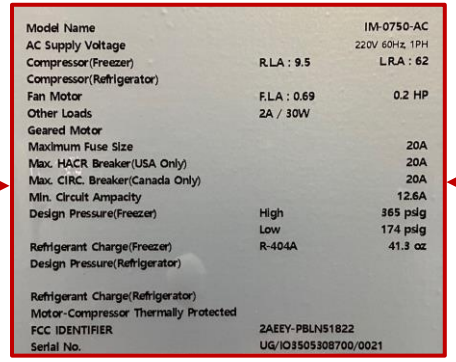

Model Name		IM-0750-AC
AC Supply Voltage		220V 60Hz 1PH
Compressor(Freezer)	R.L.A : 9.5	L.R.A : 62
Compressor(Refrigerator)		
Fan Motor	F.L.A : 0.69	0.2 HP
Other Loads	2A / 30W	
Geared Motor		
Maximum Fuse Size		20A
Max. HACR Breaker(USA Only)		20A
Max. CIRC. Breaker(Canada Only)		20A
Min. Circuit Ampacity		12.6A
Design Pressure(Freezer)	High	365 psig
	Low	174 psig
Refrigerant Charge(Freezer)	R-404A	41.3 oz
Design Pressure(Refrigerator)		
Refrigerant Charge(Refrigerator)		
Motor-Compressor Thermally Protected		
FCC IDENTIFIER	2AEEY-PBLN51822	
Serial No.	UG/IO3505308700/0021	

IM-Series 22” Wide Models

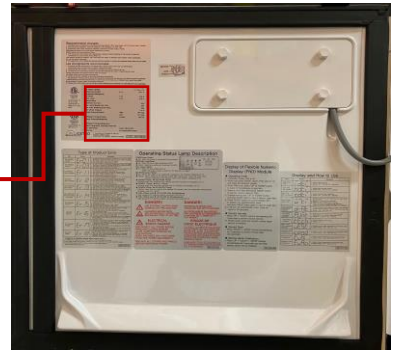

After loosening the screws on the top and bottom right-side of the front cover, the model/serial tag can be found to the right of the evaporator for 30” models or on the back-side of the door on 22” models.

Check for power.

Does the machine have power? Look at the front cover and observe if the GREEN power light is on steady (not flashing).

If the power light is off, check to see if circuit breaker has tripped or if the machine has become unplugged.

Check for water.

Does the machine have water? Look at the front cover and observe if the YELLOW "no water" light is on steady (not flashing).

If the "no water" light is on, check to see if the water supply valve is open, that water trough inside the machine is NOT out of place, and that the water trough is empty (no water).

The handle on the water valve will be parallel with the water line when it's open.

The handle on the water valve will point away from the water line when it's closed.

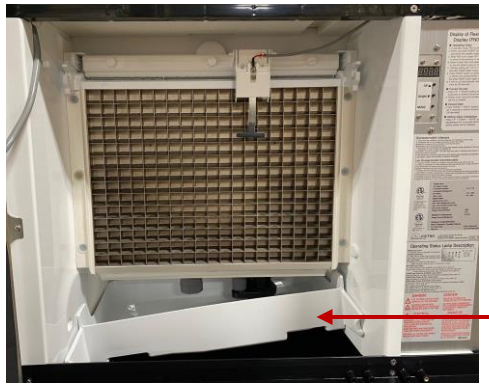

Water trough is out of alignment

If the water supply is open, the water trough is securely in place, and there is no water in the water trough, ensure that the water level sensor is not out of place.

Remove the water trough.

Sometimes the water level sensor and water pump can become dislodged during transportation or installation and go unnoticed.

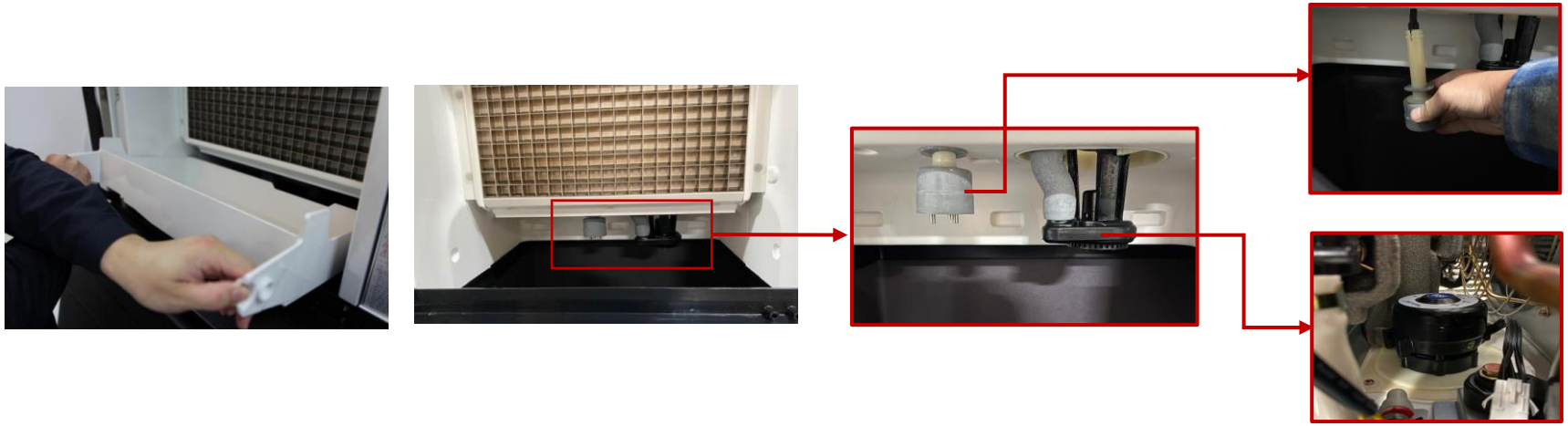

Remove the water trough to expose the water level sensor and water pump. Pull the water level sensor down until the electrical connection is visible and make sure it's securely connected. Push the sensor back up until it "clicks" into place. Visually inspect the water pump to ensure it's level and not out of place.

Check the ice thickness sensor.

Part of the installation process is to check that the ice thickness sensor is properly adjusted. Too close to the evaporator and the customer will have hollow cubes (or worse) the machine won't make ice at all. Too far from the evaporator and you're freeze time will be too long and the customer will complain of "thick" or "chunky" ice.

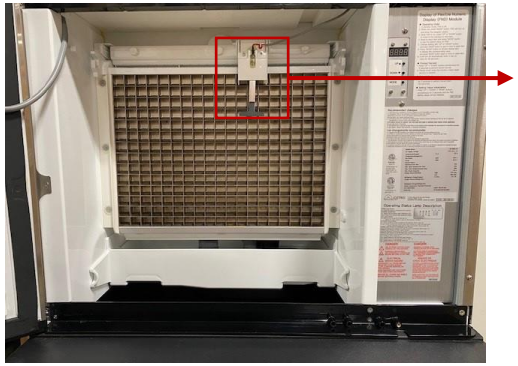

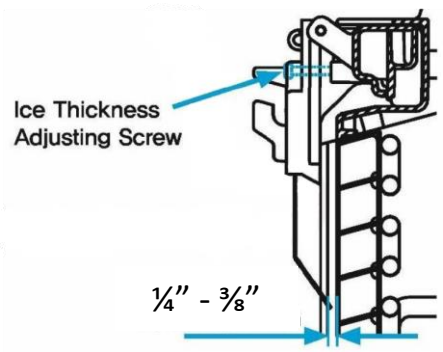

Lift the water curtain up and out of the curtain hangers to expose the ice thickness sensor. No need to bend the curtain to remove it.

The ice thickness sensor should NOT be touching the evaporator plate. There should be approximately ¼" - ⅜" of space between the sensor and the evaporator. Turn the adjustment screw on the sensor clockwise to put more space between the sensor and the evaporator. Turn the adjustment screw counter-clockwise to put less space between the sensor and evaporator.

Hinged door & access to diagnostic lamps.

The door can rest on top of machine if needed. Simply press in the pin on the top/left hinge to remove front panel and place it on top of the ice machine.

ABS/anti-microbial interior & no tools required.

We've improved upon a classic design using studier parts that won't break the moment they're removed for cleaning and/or servicing!

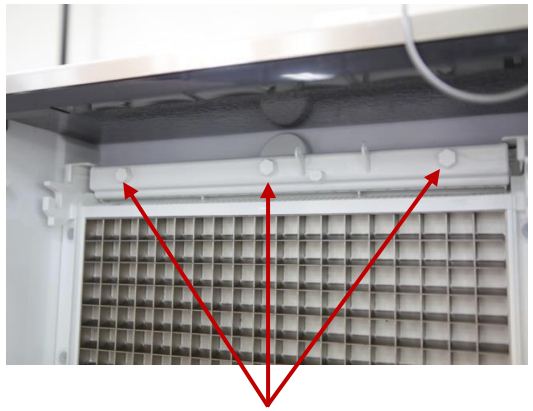

Remove 3 thumb screws.

Remove distributor cover.

Hold left & right tabs in
& pull distributor forward

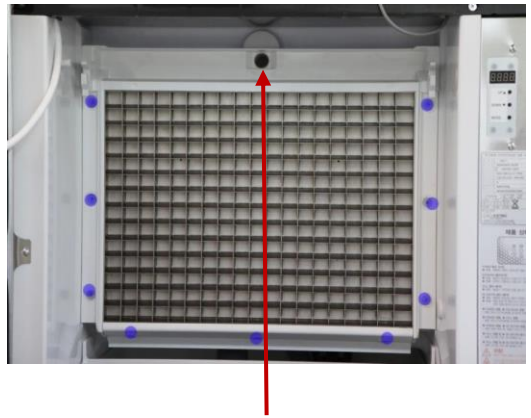

Water supply from pump, with
the distributor tube removed.

IM-Series
Key Features

ABS/anti-microbial interior & no tools required.

We've improved upon a classic design using studier parts that won't break the moment they're removed for cleaning and/or servicing!

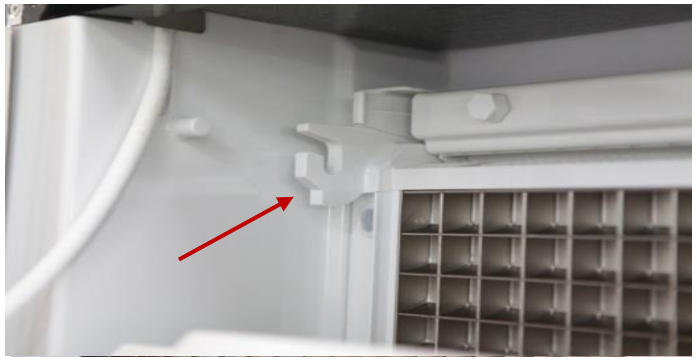

Our water curtain design is considered the best in the industry! Study curtain hangers allow you to simply pull the curtain open abut 30° then lift up & pull forward to remove!

No need to bend the curtain and risk breaking it any longer!

Heavy-duty, non-corrosive platform.

Every ice machine needs a solid foundation. Ours comes with a vacuum formed, high-density foam injected base, which is resistant to rust and corrosion!

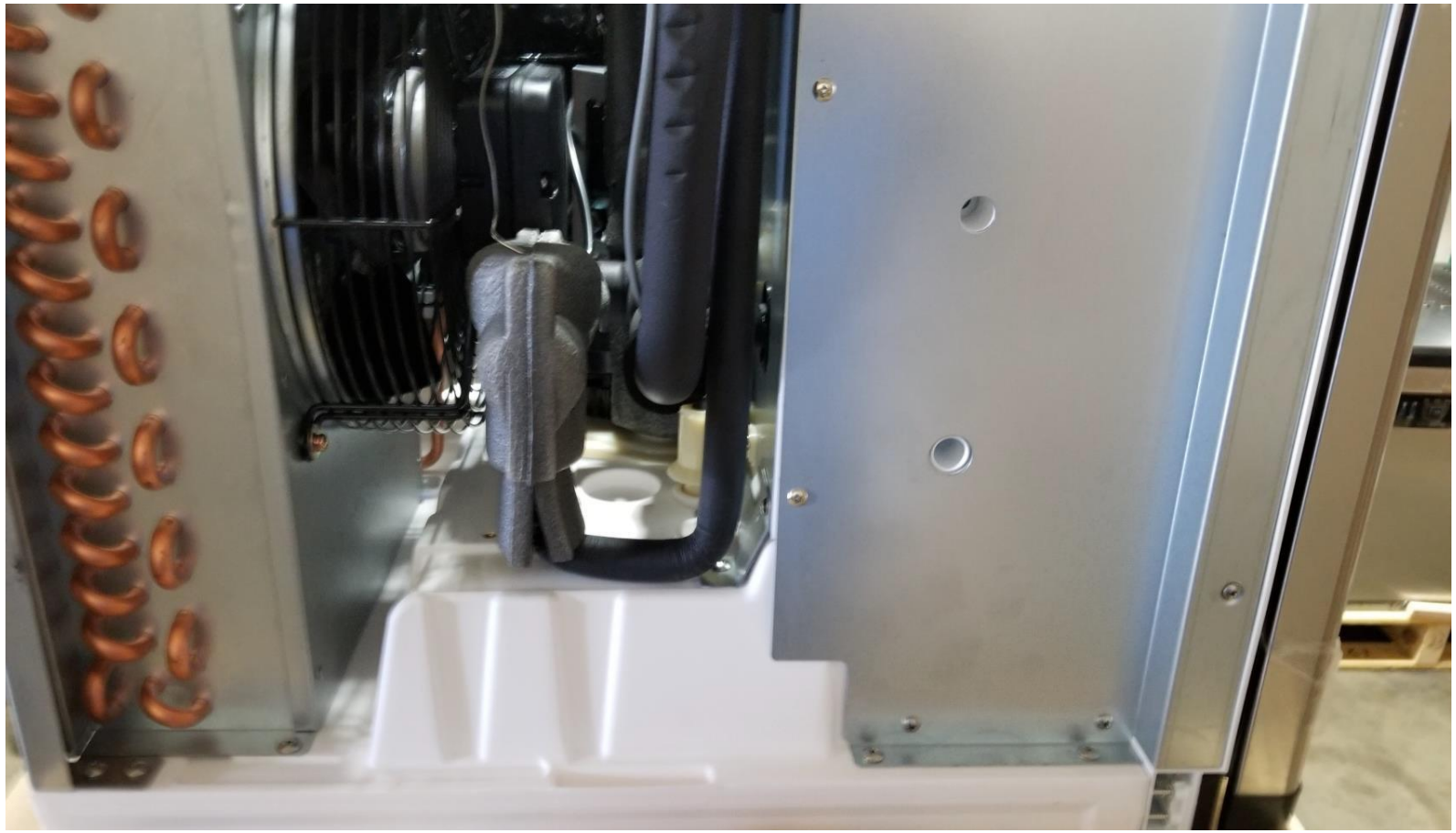

IM-Series
Key Features

Washable & magnetic air filter.

That’s right… it’s magnetic. No more plastic clips breaking and/or getting lost!

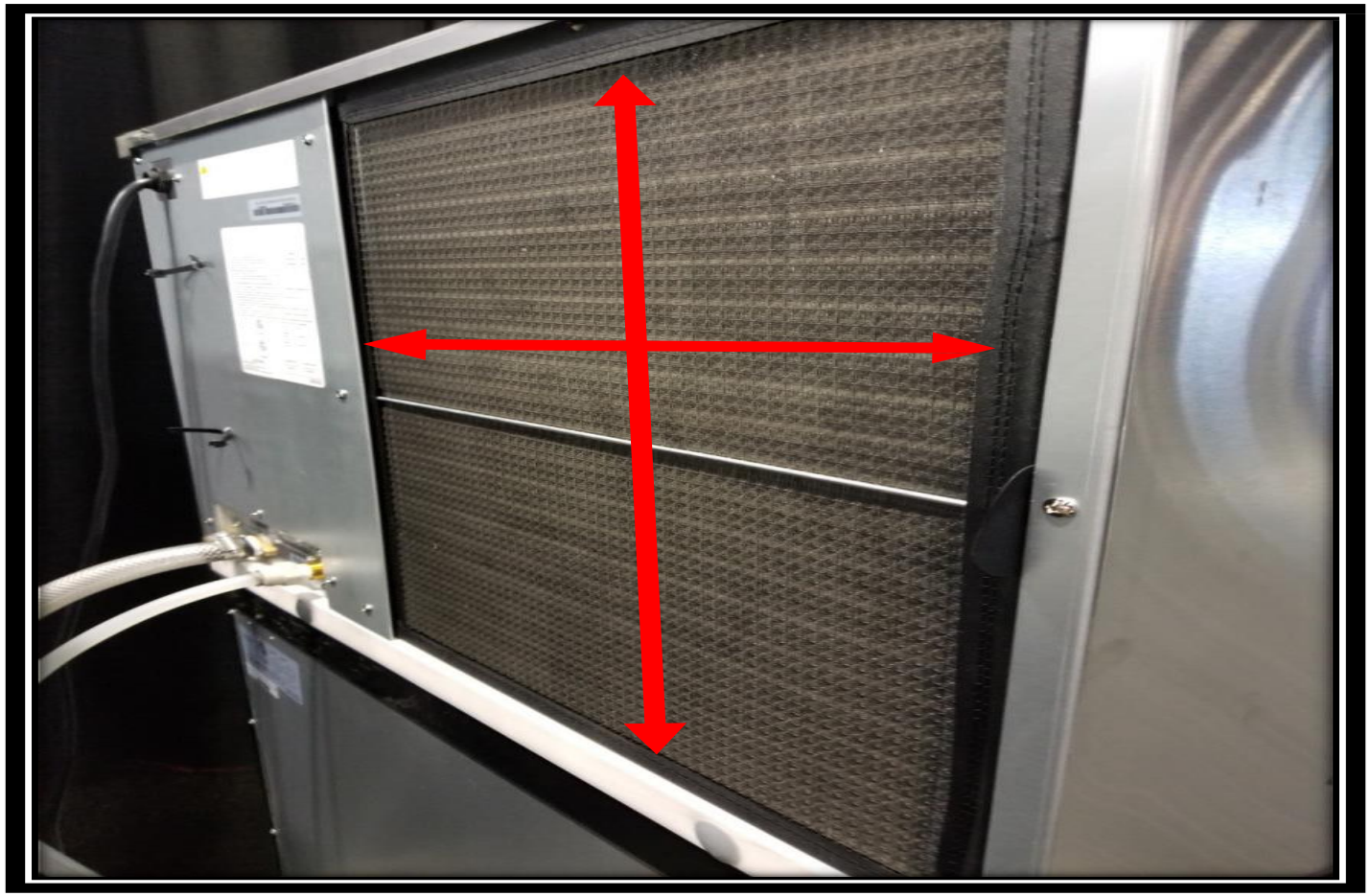

IM-Series
Key Features

Ice production managed by magnetic bin switch.

BIN SWITCH:
MAGNET ON WATER CURTAIN.
SWITCH IN CONTROL BOX.

BACK OF CURTAIN MAGNET ATTACHED

During the freeze cycle, the water curtain switch is closed. When the ice thickness control senses water, the machine goes into defrost. The ice will release within 1-1 ½ minutes and drops into the bin. The water curtain opens, then closes, putting the machine back into freeze. When the ice bin is full, ice will prevent the curtain from closing and the machine will shut down. When ice is drawn down, the curtain will close, and the machine will start.

Removal of the water pump.

The pump motor is secured in a dry environment. To remove, loosen the thumb screws, remove the screws around pump, remove the hoses clamp/hose & lift out.

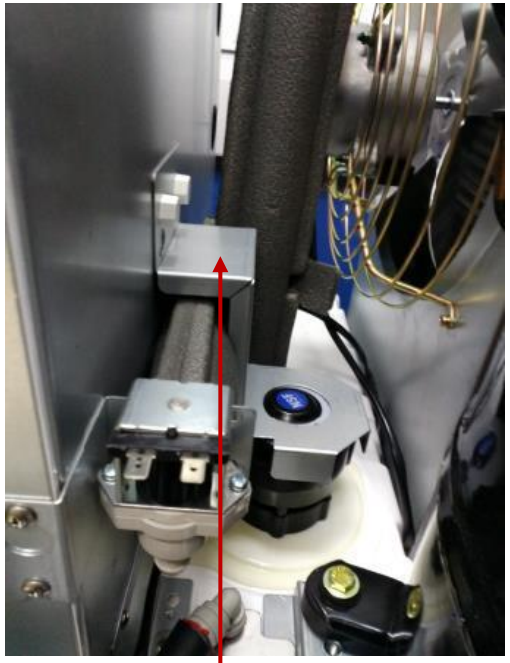

Pump Motor Bracket

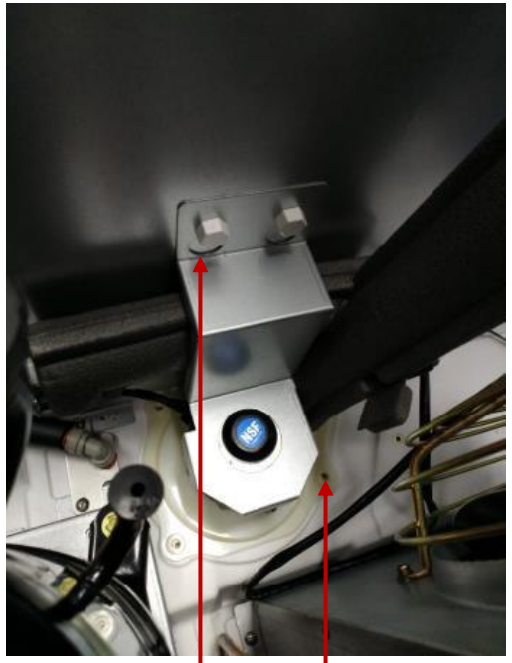

Screws

Keyhole Slots

IM-Series Drop Zone Chart.

1) IM-0350/0460/0550-22 Series(22")

(A)22" (B)24.8" (C)15" (D)3.25" (E)2" (F)2"

2) IM-0350/0460/0550/0750/1100 Series(30")

(A)30" (B)24.8" (C)15" (D) 7.5" (E) 2" (F)2"

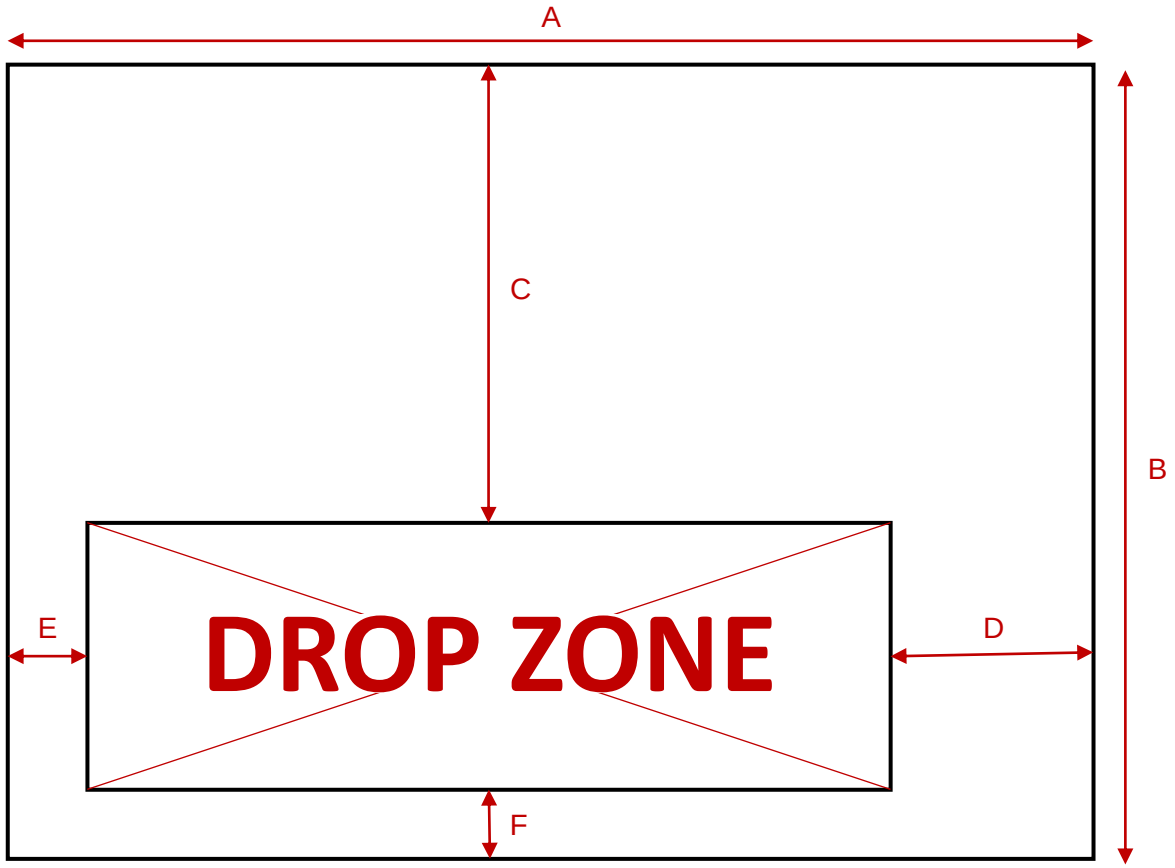

IM-Series
Drop Zone

Operating Status Lamp Description

POWER Lamp (Green)
On: When the power is connected to the machine.

ICE/WASH Lamp ((Green)
On: When in the ice making mode. (Switched to ICE)
Flickers: When in the cleaning mode. (Switched to WASH)

FULL Lamp (Yellow)
On: When the Ice Storage Bin is filled with ice. When the water curtain is open for 30 seconds or longer

NO WATER Lamp (Yellow)
On: When insufficient water supplied to the machine. (Error code 15).
Flickers: When entering the harvest mode after making ice, when the water level sensor (high/low level) detects water level (water). (Error code 16).

POWER Lamp Flickers & ICE/WASH Lamp Flickers
When the maximum ice making time (65 minutes) is exceeded. (Error code 11).

POWER Lamp Flickers & FULL Lamp Flickers
When the maximum harvest time (5 minutes) is exceeded. (Error code 12).

POWER Lamp Flickers & NO WATER Lamp Flickers
When the ice making cycle exceeds 30 minutes and evaporator temperature Is higher than 32 deg. F. (Err. 01).

FULL Lamp Flickers & NO WATER Lamp Flickers.
High pressure cut-out occurred once. (Error code 13).

FULL Lamp Flickers & NO WATER Lamp On.
High pressure cut-out occurred three consecutive times. (Error code 14**)**

Lamp Indicators
IM-Series

IM MODULAR SEQUENCE OF OPERATION

INITIAL START-UP IM SERIES

1. Move the ICE-OFF-CLEAN switch to the “ICE” position.
2. Water inlet solenoid energizes and allows water trough to fill until water reaches the low-level sensor on the water sensor probe.
3. Dump valve & water pump energize to discard the remaining water in the trough for 20 seconds.
4. Water valve energizes and allows water trough to fill until water reaches the high-level sensor on the water sensor probe.
5. Five seconds later, the hot gas valve energizes for 10-20 seconds to allow for pressure equalization and to reduce compressor starting torque.
6. The hot gas solenoid is de-energized once the compressor and condenser fan are energized for a 15 second evaporator pre-chill.
7. The water pump is energized after the 15 second pre-chill, circulating water over the evaporator.
8. The water inlet solenoid is energized and supplies additional water once water level sits below the low-level sensor.
   (Happen in 1st cycle only. *From the second cycle onward, even if the low water level is detected, no additional water supplied*)
9. Water circulates over evaporator for approximately 10 minutes.
10. When water contacts the ice thickness probe for 7 continuous seconds, the machine enters the defrost cycle (*Harvest*).
11. With compressor running, the hot gas valve is energized for approximately 1.5 minutes or until the ice is harvested.
12. The defrost cycle is terminated when ice drops from the evaporator and causes the bin switch to open and close.
13. If the ice bin level is sufficiently high enough that ice is trapped between curtain and evaporator, the machine stops operation and the “Full Lamp” on front of machine is lit.

NORMAL CONTINUOUS SEQUENCE OF OPERATION DURING ICE MAKING MODE IM SERIES

1. With water curtain closed, the dump valve and water valve are energized for 15 seconds. With brackish water emptied from the sump trough, the water pump and dump valve are de-energized.
2. After 15 seconds the dump valve is de-energized, but the water valve is energized until the water level reaches high level sensor, plus and additional 15 seconds (adjustable). The fan motor is energized after 5 seconds with the water curtain closed.
3. When water contacts the ice thickness sensor for 7 continuous seconds, the machine enters the defrost cycle (Harvest).
4. The hot gas valve is energized for approximately 50 seconds. At this time, the water pump and water supply valve are de-energized.
5. The compressor and hot gas valve continue to defrost evaporator until ice falls from evaporator plate.
6. Ice falling from evaporator causes the water curtain open & close signaling defrost termination.
7. With the Curtain closed, the machine begins another cycle.

When the machine shuts down due to full bin level, with the 'Full Lamp' lit, removal of ice from the bin will cause the curtain to close, which closes the curtain switch and energizes the machine with the same steps outlined in the 'INITIAL START-UP'.

Normal continuous operation starts a new cycle with steps 1 through 7.

WASH CYCLE FOR ALL IM-SERIES MACHINES

NOTE: If the machine is in the 'ICE' mode, first place the power switch in the 'OFF' position and wait for the machine to finish its current cycle and stop.

1. With the power switch in the 'OFF' position, add the appropriate amount of ice machine cleaner or sanitizer to the water trough.

WARNING! Do NOT mix ice machine cleaner and sanitizer together. Use one or the other separately. Mixing cleaner & sanitizer together can cause severe bodily injury.

2. Place the power switch on the front panel to the 'WASH' position to run the wash cycle.
3. Water inlet solenoid valve opens for a 30 seconds to fill.
4. Water pump then runs for 10 minutes, circulating the mix through the water trough, pump, connecting hose, water distributor, and evaporator.
5. Dump valve solenoid opens for a 40 second flush.
6. Water inlet solenoid valve opens for a 30 second fill.
7. Water pump then runs for 1.5 minutes to circulate fresh water.
8. Dump valve solenoid opens for a 40 second flush.
9. Steps 5-7 repeats five times.

WARNING! Use ONLY nickel safe ice machine cleaner.

Cleaning Agent (Nickel Safe Cleaner)	Water
150 ml (16 oz)	4 Liters
Disinfectant (5.25% Sodium Hypochlorite)	Water
200 ml	5 Liters

CIRCUIT DIAGRAM

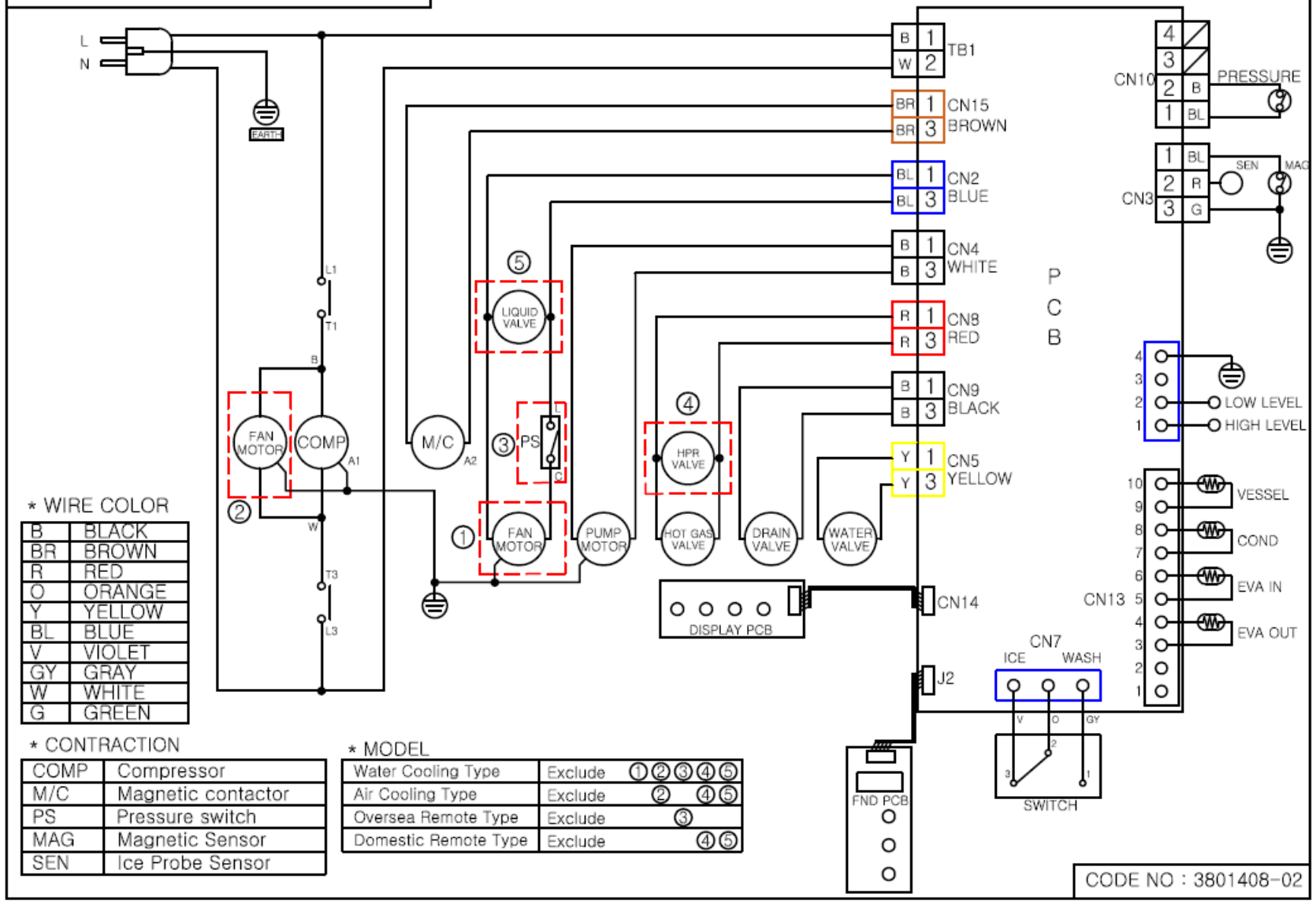

* WIRE COLOR

B	BLACK
BR	BROWN
R	RED
O	ORANGE
Y	YELLOW
BL	BLUE
V	VIOLET
GY	GRAY
W	WHITE
G	GREEN

* CONTRACTION

COMP	Compressor
M/C	Magnetic contactor
PS	Pressure switch
MAG	Magnetic Sensor
SEN	Ice Probe Sensor

* MODEL

Water Cooling Type	Exclude	①②③④⑤
Air Cooling Type	Exclude	② ④⑤
Oversea Remote Type	Exclude	③
Domestic Remote Type	Exclude	④⑤

IM-Series
Wiring Diagram

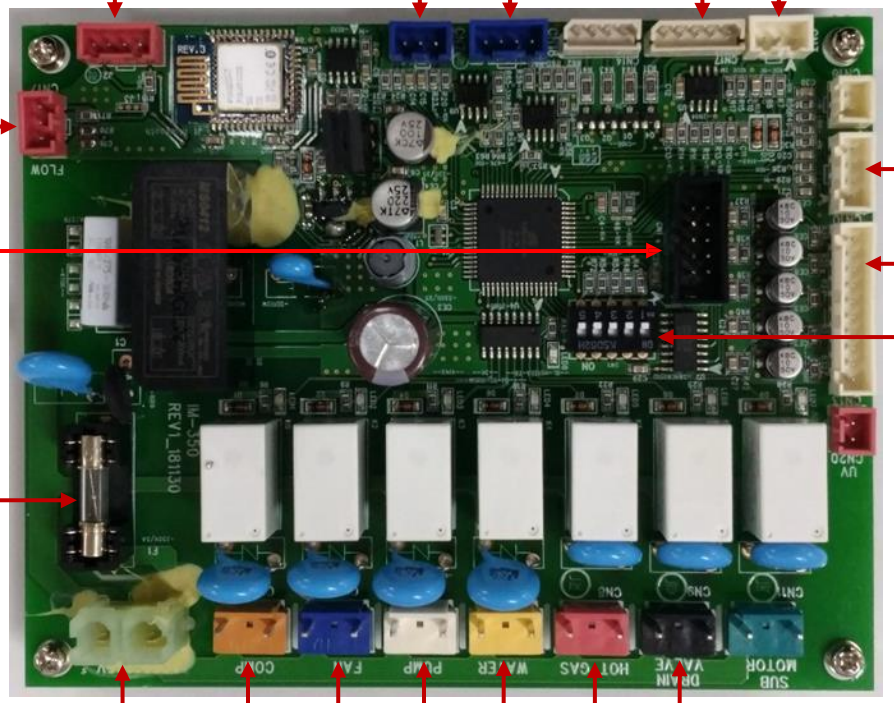

FND Board

Relays light when energized with a GREEN light on the PCB for simple diagnostics.

IM-Series
PCB & FND

Switches will be upside-down when facing the PCB

Turning dip switches down will put them in the "ON" position!

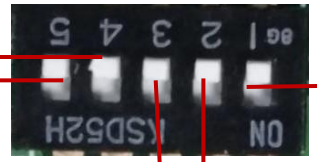

4	5	Descriptions
ON	ON	IM-0350/0460/0550-22 Series(22")
ON	OFF	IM-1100 Series
OFF	ON	IM-1100 Remote
OFF	OFF	IM-0350/0460 /0550/0680 Series(30")

3	Descriptions
ON	Air cooled
OFF	Water cooled

2	Descriptions
ON	Use drain function
OFF	Do not use drain function (All the drain time : OFF)

1	Descriptions
ON	Drain after harvest
OFF	Drain after ice making

Initial Dump: Basic Process

1) It only works at the beginning of the first "ice making" cycle.
2) Check the water level sensor and operate the dump valve and water pump in case of high-water level.
3) When the low level is detected, the dump valve and the water pump are stopped.
4) The maximum drain time is 30 seconds.
5) After the initial drainage is completed, the water supply enters operation.

Model	Initial drain time	Drain after harvest	Drain after ice making	Water supply delay time	Pump stop time during ice making	Harvest Assist Temperature
30" Series	20s	20s(0680-10s)	N/A (20s)	15s	15s	N/A (0℃)
22" Series	20s	10s	N/A (10s)	5s	15s	N/A (0℃)
1100 Series	20s	10s	N/A (10s)	30s	15s	N/A (0℃)

IM-0460/0680
Water Cooled

IM-0350/0460
0550/0680
Air Cooled

IM-0350/0460
0550-22 (22")
Water Cooled

IM-0350/0460
0550-22 (22")
Air Cooled

IM-1100
Water Cooled

IM-1100
Air Cooled

IM-1100
Remote

IM-Series
PCB Dip Switch Settings

Testing The Water Level Sensor

When the water level sensor is bad the machine will trip one of two error codes:

- Er15: Water level sensor (high level probe) is not detected after 5 minutes.
- Er18: Water level sensor (low-level probe) is not detected within 5 minutes of dump valve being energized.

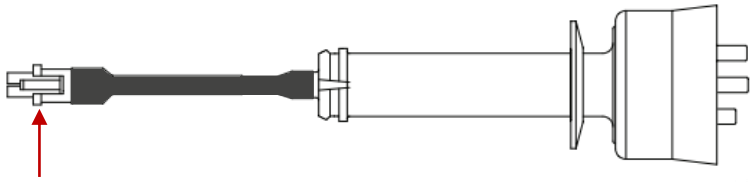

With the probe disconnected from the harness, perform the following tests:

High-level probe to common probe

Low-level probe to common probe

High-level probe to low-level probe

All should read ∞ resistance.

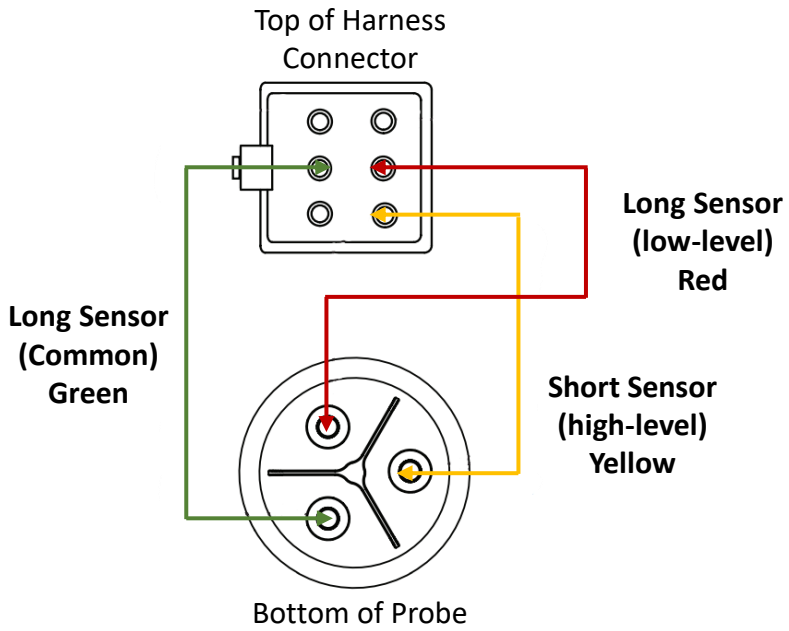

With the probe disconnected from the harness, perform the following tests:

High-level probe to high-level harness connector

Low-level probe to low-level harness connector

Common probe to common harness connector

All should read 0 ohm.

IM-Series
Service Tips

Service Bulletin: Water Level Sensor

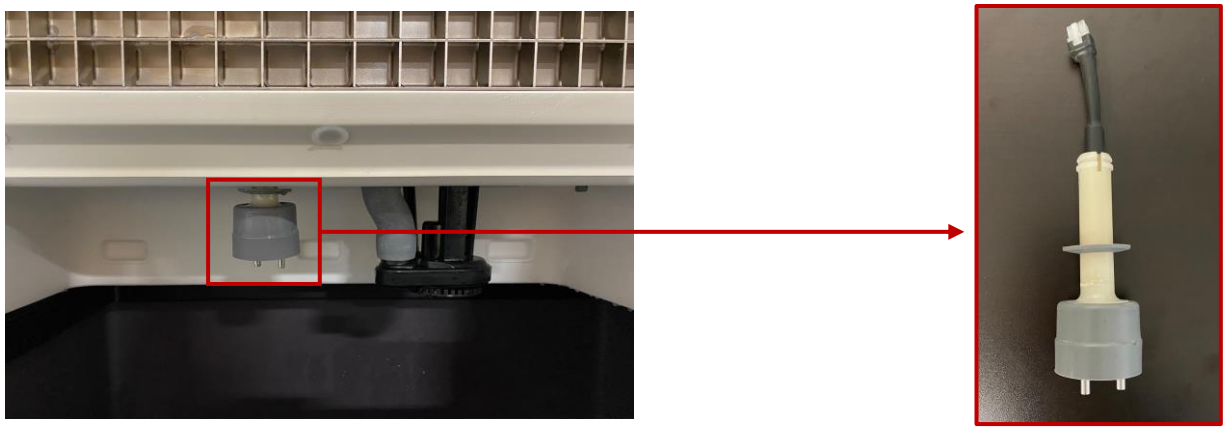

The IM-Series water level sensor was changed to a float activated switch.

It was implemented in January 2022 with serial numbers beginning with “VA”

Testing The Float Switch

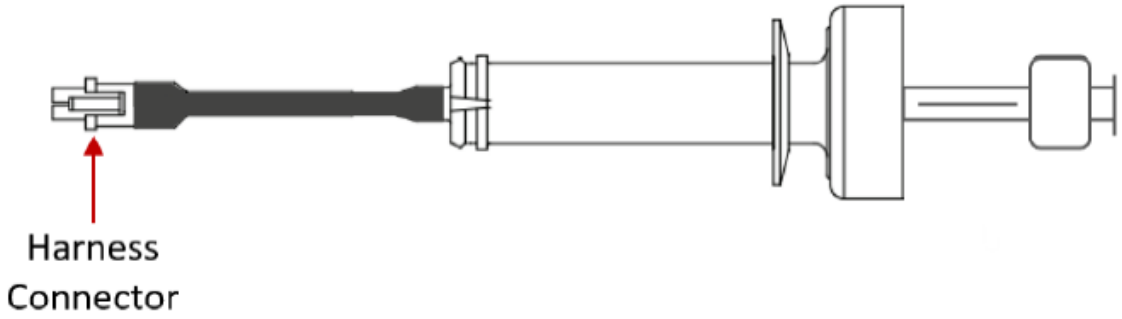

To test the float switch, simply check for continuity between the to wires found in the harness connector.

- When the float is in the down position, the switch is closed.
- When the float is in the up position, the switch is open.

If the float switch tests good, check the wiring harness for continuity.

If the float switch and the harness test good, the problem is with the control board.

Pinching Tubing

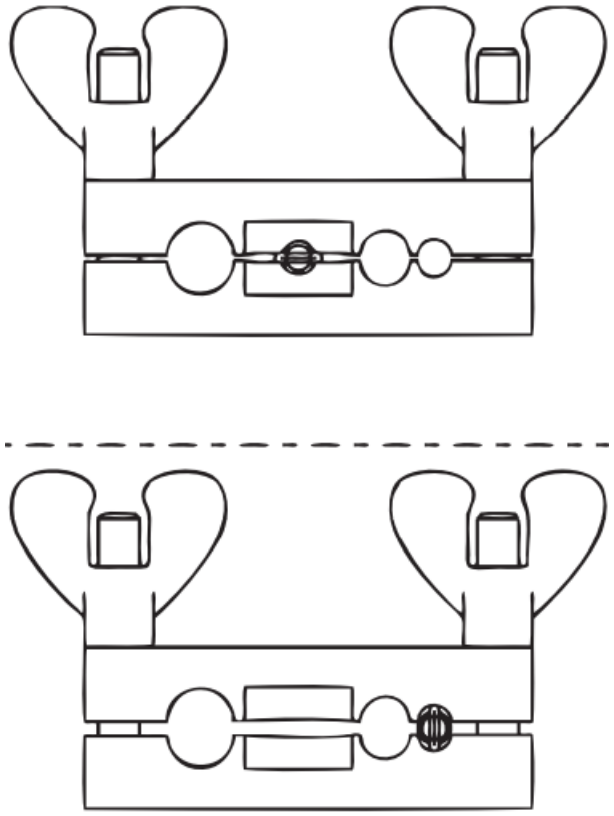

Re-rounding Tubing

Important

This is a required in-warranty repair procedure.

1. Disconnect power to the ice machine.
2. Follow all manufacturer's instructions supplied with the pinch-off tool. Position the pinch-off tool around the tubing as far from the pressure control as feasible. (See the figure on next page.) Clamp down on the tubing until the pinch-off is complete.

⚠ Warning

Do not unsolder a defective component. Cut it out of the system. Do not remove the pinch-off tool until the new component is securely in place.

3. Cut the tubing of the defective component with a small tubing cutter.
4. Solder the replacement component in place. Allow the solder joint to cool.
5. Remove the pinch-off tool.
6. Re-round the tubing. Position the flattened tubing in the proper hole in the pinch-off tool. Tighten the wing nuts until the block is tight and the tubing is rounded.

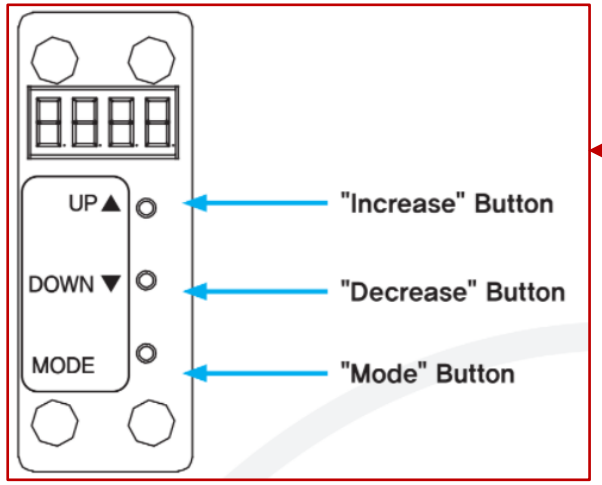

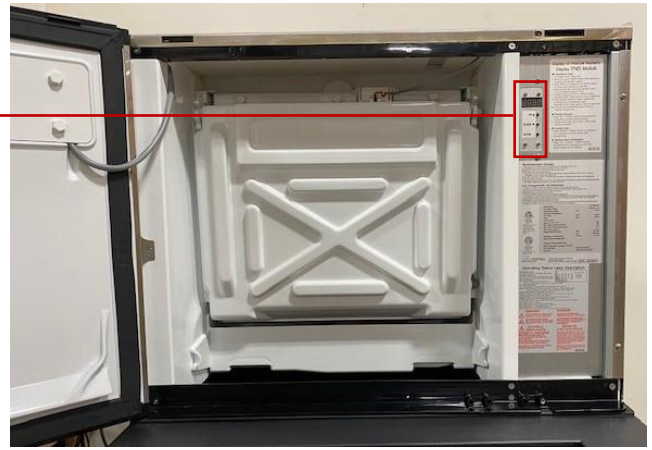

- Operating Order
  1. In standby mode the Flexible Numeric Display (FND) is off.
  2. When you press the “MODE” button, the FND will turn on and either show the last error code (if there is one) OR the first setting.
  3. While the FND is on, press the “UP” or “DOWN” button to move through the available settings.
  4. Pressing the “MODE” button again will display the default value for the current setting.
  5. Use the “UP” or “DOWN” buttons to change the default value, followed by the “MODE” button to save the new value.
  6. If there are two values for one setting, press the “MODE” button to move between the two value settings.
  7. The FND will automatically turn off when it has no input for 30 seconds.
- Forced Harvest
  1. Press the “UP” + “DOWN” simultaneously for 3 seconds to force the harvest cycle on the ice machine.
- Forced Drain
  1. Press the “DOWN” + “MODE” buttons simultaneously for 3 seconds to force a 30 second drain function.
- Reset to Default Values
  1. Pressing the “UP” + “DOWN” + “MODE” buttons simultaneously for 3 seconds will reset the FND values to their default settings.
  2. Please refer to the user manual when setting the “Drain Time After Harvest” value.

Error codes are also listed in the owner’s manual.

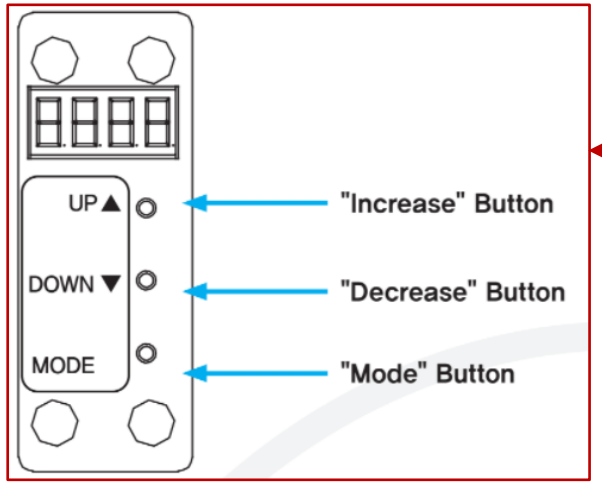

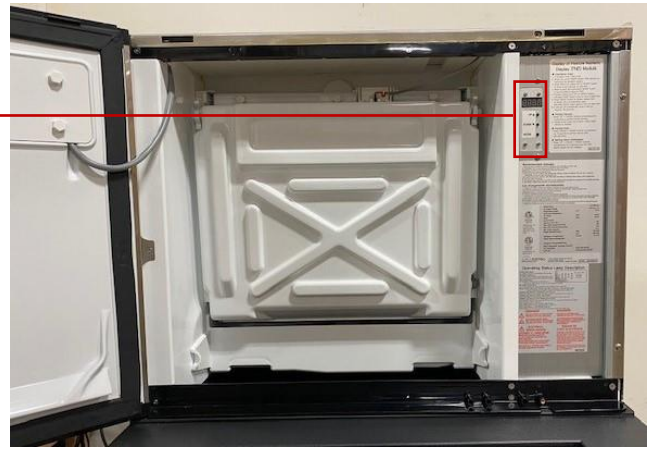

The Flexible Numeric Display (FND) allows for the adjustment of the flush time, which can help reduce scale accumulation in the water trough, preventing it from clogging other vital parts, such as the water pump and water distribution tube.

Additionally, the FND allows for the adjustment of the water fill time, which will extend the fill time for a set amount once the high-level sensor is sensed.

The fill time can be adjusted between 0-30 seconds, in 1 second increments.
The flush time can be adjusted between 0-90 seconds, in 1 second increments.

See next page for all FND functions.

Flexible Numeric Display (FND) Functions

Item	Display	Description	Set range	Default
Initial Drain Time	Idt1	Adjust initial drain time.	0 ~ 30 sec (by 1 second)	20 sec
Drain Time after Harvest	Hdt1	Adjust drain time after harvest.	0 ~ 90 sec (by 1 second)	10 sec
Drain Time after ICE Making	cdt1	Adjust drain time after making ice.	0 ~ 30 sec (by 1 second)	10 sec
Water Supply Delay Time	wrt1	Adjust the delay time after detecting high water level. (0.5 seconds) Maximum water supply time: 5 minutes If high water level has already been detected when the water is supplied, the delay is not applied.	0 ~ 30 sec (by 1 second)	15 sec (Different by model)
Harvest Assist Temperature (Optional)	drAt	With hot gas, run the sub-motor if the preset condenser temperature is exceeded.	-56° ~ 138°F (by 1°F)	0°F
Pump Standby Time during Ice Making (Optional)	PUAt	Stops pump for the preset time when the water temperature in the water vessel turns to 0℃.	0 ~ 120 sec (by 1 second)	15 sec
Temperature Selection	tEch	Choose Celsius or Fahrenheit.	℃ / ℉	℃
Water Vessel Water Temp. (Optional)	uESE	Displays current water temperature in the water vessel.	-56° ~ 138°F (by 1°F)	N/A on IM
Condenser Outlet Temperature	cond	Display current temperature at the condenser Outlet.	32° ~ 212°F (by 1°F)	
Evaporator Inlet Temperature	EuAI	Display current temperature at the evaporator Inlet.	-56° ~ 138°F (by 1°F)	
Evaporator Outlet Temperature	EuAo	Display current temperature at evaporator outlet	-56° ~ 138°F (by 1°F)	

IM-Series
Service Tips

Tip 1: Error Code 1 or 3 Potential Causes

Evap temp 32°F or higher after 30 minutes in freeze.

OR

Evap temp exceeds 23°F after 30 minutes in freeze.

Refrigerant:

- Is the machine overcharged?
- Is hot gas leaking past hot gas solenoid valve?
- Is TXV flooding the evaporator with refrigerant?
- Headmaster stuck in bypass? (REMOTE ONLY)

Electrical:

- Is suction line thermistor open or shorted?
- Defective fan cycling control?

Water:

- Is water inlet solenoid valve leaking by?
- Water regulator restricting water flow? (WATER-COOLED ONLY)

Air:

- Is the air filter or condenser clogged?
- Is the condenser discharge air being recycled back into the condenser?

Tip 1: Error Code 11 Potential Causes

Ice thickness probe not sensing water contact after 65 minutes 3 consecutive times.

Water:

- Is there sufficient water supply?
- Is the water pressure below 20psi?
- Is the water level sensor scaled up or giving a false full level reading?
- Does the water pump have power but it's not running?
- Is the water distribution tube scaled up?
- Is the was dump valve dirty or stuck open?

Ice Thickness Sensor:

- Is the ice thickness sensor adjusted too far out?
- Is the ice thickness sense faulty and not reading properly?

Refrigerant:

- Is the system undercharged?
- Is the TXV starving the evaporator?
- Is the hot gas valve leaking?

Tip 1: Error Code 12 Potential Causes

Curtain switch is not detected 5 minutes into harvest 3 consecutive times.

Electrical:

- Is the curtain sensor faulty?
- Has the curtain magnet fallen off the water curtain?
- Dose the hot gas valve have power, but it’s not opening?
- Is the ice thickness probe too close to the evaporator?

Refrigeration:

- Dose the hot gas valve have power, but it’s not opening?

Tip 1: Error Code 13 & 14 Potential Causes

High pressure switch opens due to high discharge pressure.

OR

High pressure switch opens due to high discharge pressure 3 consecutive times.

Water:

- Is water supply to condenser insufficient? (WATER COOLED ONLY)
- Is water supply to condenser below 20psi? (WATER COOLED ONLY)

Air:

- Is there poor air circulation?
- Is the condenser air filter dirty and in need of cleaning?
- Is the air condenser dirty and in need of cleaning?
- Is the air condenser blocked.
- Does the condenser fan motor have power from PCB?
- Is the condenser fan motor capacitor faulty/bad?
- Is the condenser fan motor faulty/bad?
- Is the fan blade broken?

Refrigeration:

- Is the system properly charged?
- Is the hot gas solenoid valve open/leaking?
- Is the headmaster stuck in bypass?

Tip 1: Error Code 15 Potential Causes

Water level sensor (high-level probe) is not detected after 5 minutes.

Water:

- Is the water supply to the machine open?
- Is the water supply pressure below 20psi?
- Does the water inlet solenoid have power to it from PCB?
- Is the water inlet solenoid valve clogged with scale/debris?
- Is there a water filter that's overdue to be changed?
- Does the water level sensor appear scaled up and in need of cleaning?
- Is water overflowing the water trough, indicating the water level sensor is not sensing a full trough?
- Is the trough full of water, but the water level sensor is indicating that the machine is empty?
- Is the dump valve stuck open?

Tip 1: Error Code 16 Potential Causes

Water level sensor detects water at the high-level probe at end of freeze cycle.

Water:

- Is the water level sensor faulty or in need of cleaning?
- Is the water inlet valve stuck open or allowing water to bleed through it.
- Faulty PCB.

Tip 1: Error Code 17 Potential Causes

Excessive cooling is detected when the machine is OFF or FULL.

Water:

- Is the water regulator faulty or stuck open?
- Is liquid-line thermistor open or shorted? Temporarily disconnecting the thermistor from the PCB will allow the machine to continue to make ice even if the error continues to occur.

Tip 1: Error Code 18 Potential Causes

Dump valve activated, but water level sensor does not read low level probe within 5 minutes.

Water:

- Is the dump valve faulty or in need of cleaning?
- Does the dump valve have power from the PCB?
- Is the drain line clogged with scale/debris?
- Is the water level sensor faulty/bad?
- Is the water pump faulty or in need of cleaning?
- Is the water pump getting power from the PCB?

P/T Chart & Cycle Times

Model	Ambient Temp.(C/F)	10/50	21/70	32/90	38/100
IM-0350-AC/AH	Water Temp.(C/F)	10/50	10/50	21/70	32/90
	Ice Production(lb/d)	391.3	367.1	292.3	219.6
	Freeze Cycle Time(min)	16	16.9	23.3	31.6
	Defrost Cycle Time(min)	1.4	1.2	0.9	0.8
	1 Cycle Time(min)	17.4	18.1	24.2	32.3
	Electric Consumption(W)	720	730	770	800
	Head Pressure[Peak] (psig)	251	253	272	321
	Suction Pressure Peak (psig)	28	29	29	31
	Evaporator Inlet Temp.(F)	11.3	7	8.4	8.4

Model	Ambient Temp.(C/F)	10/50	21/70	32/90	38/100
IM-0350-AC/AH-22	Water Temp.(C/F)	10/50	10/50	21/70	32/90
	Ice Production(lb/d)	381	394	311	239
	Freeze Cycle Time(min)	10.9	12.2	16.7	21.7
	Defrost Cycle Time(min)	2.7	1.3	0.7	0.6
	1 Cycle Time(min)	13.6	13.5	17.4	22.3
	Electric Consumption(W)	700	750	810	820
	Head Pressure[Peak] (psig)	206	224	298	341
	Suction Pressure Peak (psig)	25	30	32	37
	Evaporator Inlet Temp.(F)	12.2	14	14	14

Model	Ambient Temp.(C/F)	10/50	21/70	32/90	38/100
IM-0460-AC/AH	Water Temp.(C/F)	10/50	10/50	21/70	32/90
	Ice Production(lb/d)	469	444	363	267
	Freeze Cycle Time(min)	11.3	13.7	19.6	24.7
	Defrost Cycle Time(min)	2	1.7	0.8	0.6
	1 Cycle Time(min)	13.3	15.5	20.4	25.3
	Electric Consumption(W)	700	730	800	860
	Head Pressure[Peak] (psig)	222	226	280	340
	Suction Pressure Peak (psig)	30	29	30	33
	Evaporator Inlet Temp.(F)	13	11.1	10.6	10.4

P/T Chart & Cycle Times

Model	Ambient Temp.(C/F)	10/50	21/70	32/90	38/100
IM-0460-AC/AH-22	Water Temp.(C/F)	10/50	10/50	21/70	32/90
	Ice Production(lb/d)	465	443	327	253
	Freeze Cycle Time(min)	10.3	10.8	14.8	18.9
	Defrost Cycle Time(min)	1.2	1.1	0.7	0.6
	1 Cycle Time(min)	11.5	11.9	15.5	19.6
	Electric Consumption(W)	790	820	870	990
	Head Pressure[Peak] (psig)	230	233	283	335
	Suction Pressure Peak (psig)	30	31	35	35
	Evaporator Inlet Temp.(F)	13.6	14.5	15.8	15.4

Model	Ambient Temp.(C/F)	10/50	21/70	32/90	38/100
IM-0460-WC/WH	Water Temp.(C/F)	10/50	10/50	21/70	32/90
	Ice Production(lb/d)	488	463	405	382
	Freeze Cycle Time(min)	13.7	13.6	16	18
	Defrost Cycle Time(min)	0.8	1	0.9	0.7
	1 Cycle Time(min)	14.5	14.6	16.9	18.7
	Electric Consumption(W)	730	730	750	760
	Head Pressure[Peak] (psig)	273	273	279	280
	Suction Pressure Peak (psig)	33	34	34	35
	Evaporator Inlet Temp.(F)	15.6	16.7	13.3	13.3

Model	Ambient Temp.(C/F)	10/50	21/70	32/90	38/100
IM-0550-AC/AH	Water Temp.(C/F)	10/50	10/50	21/70	32/90
	Ice Production(lb/d)	585	551	399	315
	Freeze Cycle Time(min)	12.2	13.1	19.3	25.5
	Defrost Cycle Time(min)	1.4	1.1	0.7	0.5
	1 Cycle Time(min)	13.6	14.2	20	26
	Electric Consumption(W)	820	870	960	1020
	Head Pressure[Peak] (psig)	224	224	284	327
	Suction Pressure Peak (psig)	24	25	26	27
	Evaporator Inlet Temp.(F)	10.2	9.1	7	5.7

P/T Chart & Cycle Times

Model	Ambient Temp.(C/F)	10/50	21/70	32/90	38/100
IM-0550-AC/AH-22	Water Temp.(C/F)	10/50	10/50	21/70	32/90
	Ice Production(lb/d)	475	508	383	301
	Freeze Cycle Time(min)	8.9	9.6	13.2	16.3
	Defrost Cycle Time(min)	2.6	1.1	0.7	0.6
	1 Cycle Time(min)	11.5	10.7	13.9	17.2
	Electric Consumption(W)	800	880	970	1030
	Head Pressure[Peak] (psig)	197	224	300	351
	Suction Pressure Peak (psig)	20	26	27	30
	Evaporator Inlet Temp.(F)	11.3	14.7	11.7	13.5

Model	Ambient Temp.(C/F)	10/50	21/70	32/90	38/100
IM-0550-WC/WH	Water Temp.(C/F)	10/50	10/50	21/70	32/90
	Ice Production(lb/d)	552	548	483	433
	Freeze Cycle Time(min)	12.6	12.5	14.9	16.6
	Defrost Cycle Time(min)	0.7	0.7	0.7	0.6
	1 Cycle Time(min)	13.3	13.2	15.5	17.2
	Electric Consumption(W)	880	890	890	910
	Head Pressure[Peak] (psig)	265	267	268	280
	Suction Pressure Peak (psig)	27	28	27	28
	Evaporator Inlet Temp.(F)	12.4	12	9.1	9.2

Model	Ambient Temp.(C/F)	10/50	21/70	32/90	38/100
IM-0750-AC/AH	Water Temp.(C/F)	10/50	10/50	21/70	32/90
	Ice Production(lb/d)	794	736	575	463
	Freeze Cycle Time(min)	8.3	8.9	12.2	15.8
	Defrost Cycle Time(min)	0.8	0.8	0.6	0.5
	1 Cycle Time(min)	9.1	9.7	12.8	16.3
	Electric Consumption(W)	1250	1290	1370	1410
	Head Pressure[Peak] (psig)	250	253	294	335
	Suction Pressure Peak (psig)	22	23	26	28
	Evaporator Inlet Temp.(F)	11.8	8.2	9	7

P/T Chart & Cycle Times

Model	Ambient Temp.(C/F)	10/50	21/70	32/90	38/100
IM-1100-AC/AH	Water Temp.(C/F)	10/50	10/50	21/70	32/90
	Ice Production(lb/d)	1198	1105	872	710
	Freeze Cycle Time(min)	10.2	11.4	15	18.7
	Defrost Cycle Time(min)	0.9	0.9	0.5	0.5
	1 Cycle Time(min)	11.1	12.3	15.6	19.1
	Electric Consumption(W)	1650	1720	1820	1880
	Head Pressure[Peak] (psig)	233	248	313	365
	Suction Pressure Peak (psig)	21	21	24	26
	Evaporator Inlet Temp.(F)	6.6	7.5	6.3	6.3

Model	Ambient Temp.(C/F)	10/50	21/70	32/90	38/100
IM-1100-WC/WH	Water Temp.(C/F)	10/50	10/50	21/70	32/90
	Ice Production(lb/d)	1044	1036	1003	721
	Freeze Cycle Time(min)	10.2	10.3	11.3	14.8
	Defrost Cycle Time(min)	1.6	1.6	1	1
	1 Cycle Time(min)	11.7	11.9	12.3	15.8
	Electric Consumption(W)	1660	1660	1710	1790
	Head Pressure[Peak] (psig)	290	281	274	342
	Suction Pressure Peak (psig)	25	25	26	30
	Evaporator Inlet Temp.(F)	8.6	8.2	8.6	8.6

Tubing Schematic

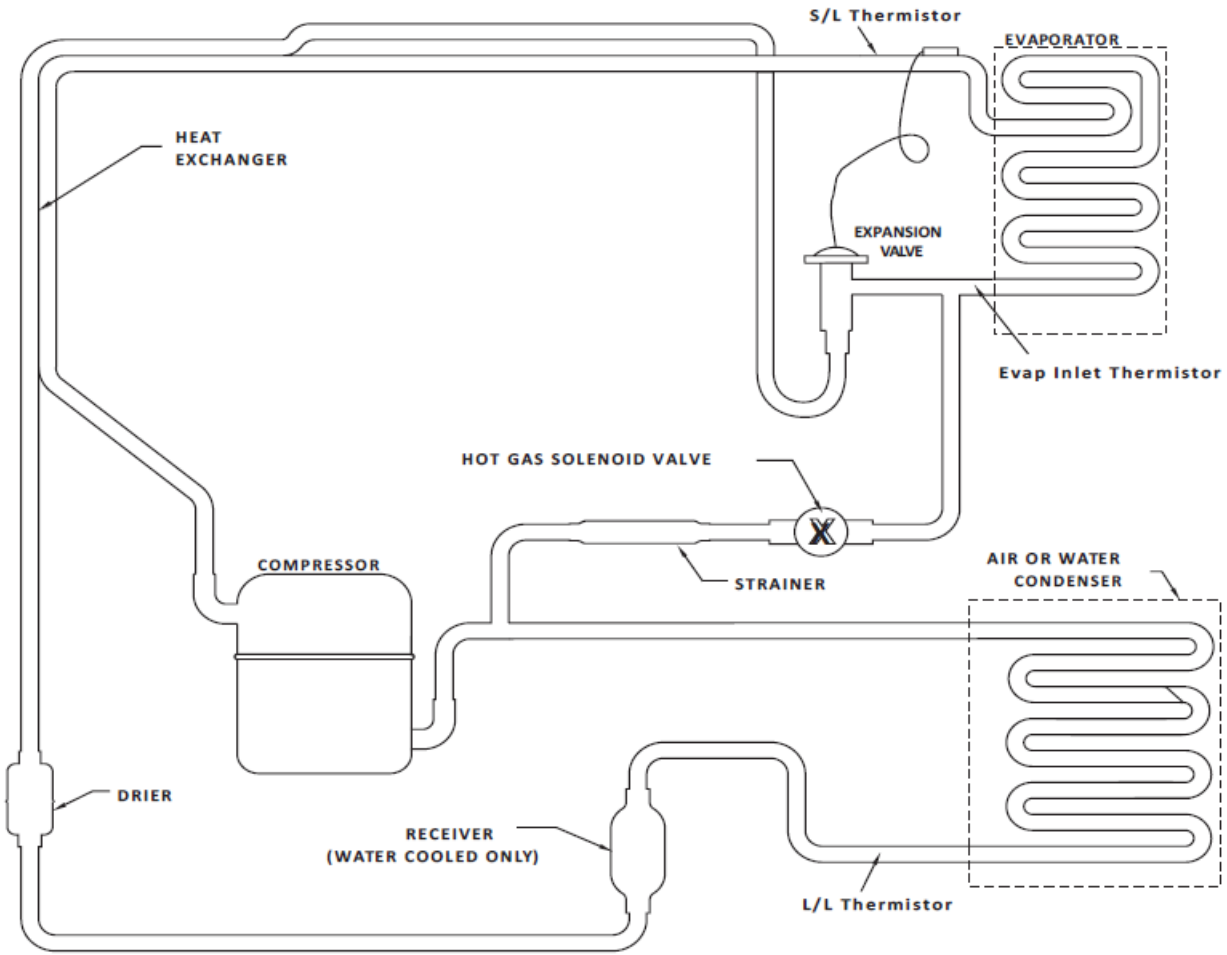

IM-Series
Tubing Schematic

Service Bulletin: Control Board

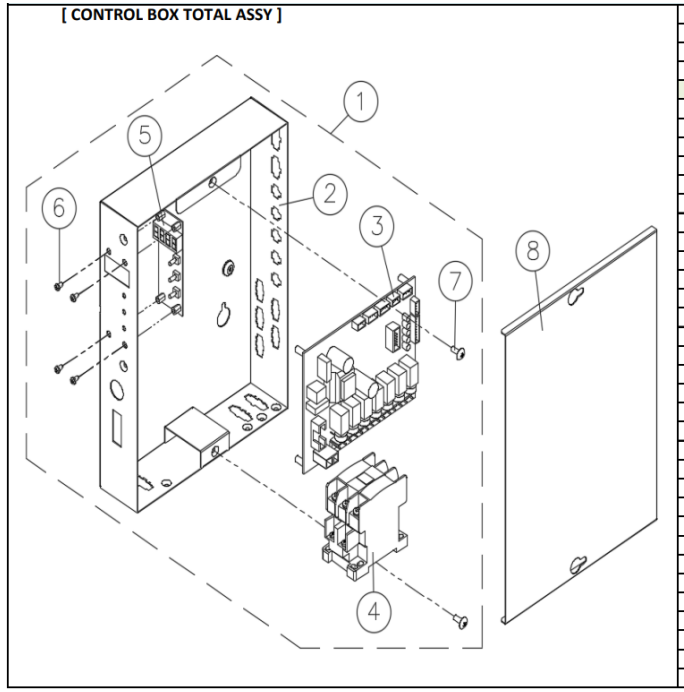

NO	ITEMS	CODE	Q'TY
1	CONTROL BOX COMPLETE ASSY	N/A	N/A
2	CONTROL BOX	374143900	1
3	MAIN CIRCUIT BOARD	367013400	1
3-1	MAIN & FND PCB KIT_F90SEC (V1.2)	367013400F90	1
4	MAGNETIC CONTACTOR	322002200	1
5	FND CIRCUIT BOARD	367013100	1
6	MACHINE SCREW	MPCX0610L	4
7	MACHINE SCREW	MTCX0812R	2
8	CONTROL BOX COVER	374144300	1

Main PCB was upgraded to extend the flush time up to 90 seconds.

Part Name: Main Circuit Board_F90SEC (V1.2)

Part Code: 3670-13400F90

Models: All IM-Series models.

FND PCB was upgraded to extend the flush time up to 90 seconds.

Part Name: FND Circuit Board_F90SEC (V1.2)

Part Code: 3670-13100

NOTE: Both parts must be used to extend the flush time up to 90 seconds.

Service Bulletin: Ice Thickness Probe Improvement

BEFORE

AFTER

The IM-Series ice thickness probe was improved upon by bending its tip.

It was implemented in November 2021 with serial numbers beginning with "UK"

Please leave a gap of ¼" – ⅜" between the probe & evaporator when installing the probe.

Service Bulletin: Main Switch Relocation

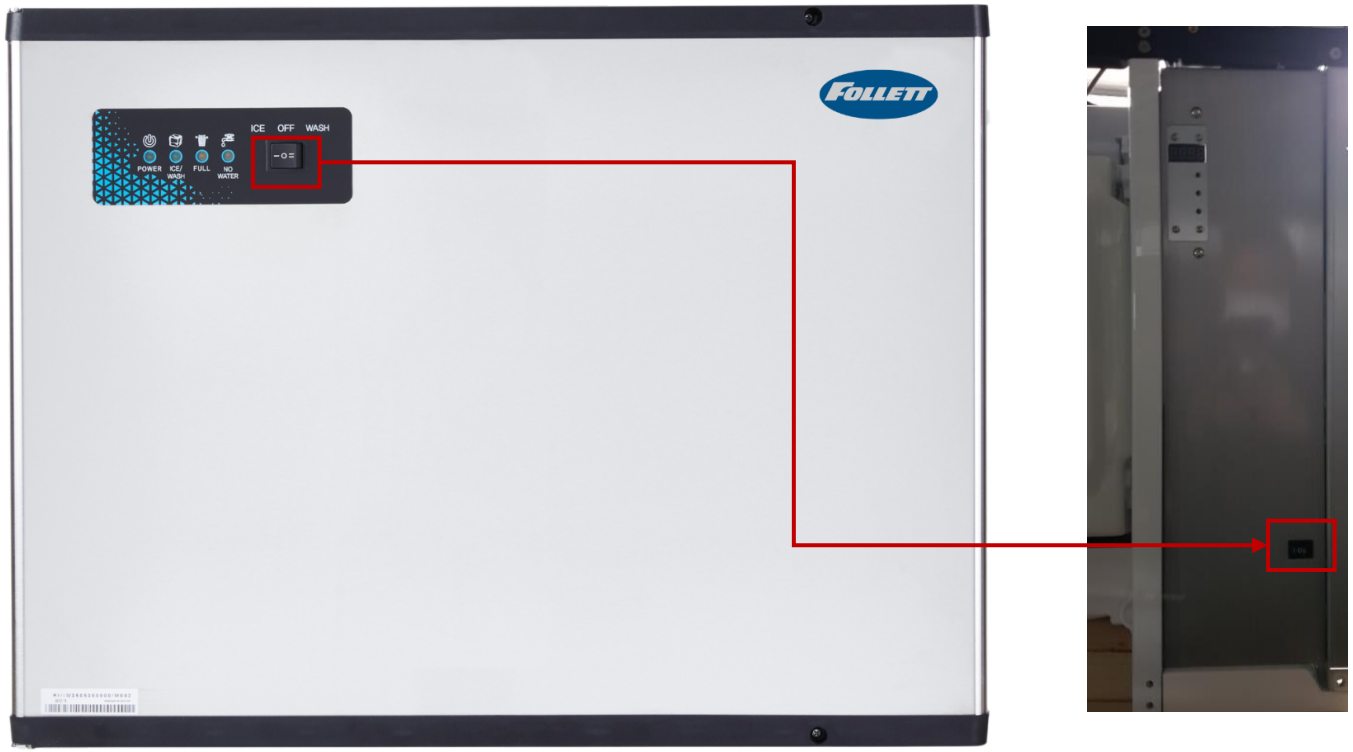

The IM-Series main switch was relocated from the front panel display to the control panel inside the machine.

It was implemented in December 2021, on the IM-550, with serial numbers beginning with “UL”

IM-Series
Service Bulletin

Reliable Operations & Longevity

- Ice is digested and sanitation and bacteria control must be checked to ensure the machine is safe by keeping it clean.
- 80-85% of machine failures are due to poor install, lack of cleaning, inadequate water treatment, or airborne slime (Bacteria).
- **Citryne by Systems IV** for all machines with pH over 7.0
- Carbon filtration removes chlorine. If there is slime or growth inside of the machine it is from airborne particulate. Carbon removes chlorine.
- Cleaning requires both Ice machine cleaner & sanitizer and should be done under good conditions 1-2 times per year.

HOW DOES CITRYNE FILTRATION WORK

Chelation Process

The Systems IV water treatment systems use patent pending technology to soften hard water based on the scientific process of chelation in which the metal ions causing hard water, principally calcium and magnesium, are bound to the chelating agent in our FDA approved, proprietary formulation, which keeps the minerals (calcium and magnesium) soluble and unable to bind to cause hard water problems. The resulting water is soft and healthy for all of your equipment needs.

The ideal pH level of drinking water is between 6 and 8.5. The pH value of water is used to determine whether water is hard or soft. Pure water has a pH of 7, and water lower than 7 pH is considered acidic. Citryne is for all ice makers with water pH above 7. For systems with pH 7 or below use carbon & polyphosphate filters.

Citryne is used to facilitate the chelation process.

CITRYNE™ is a food grade, biodegradable formulation that eliminates scale buildup. With its FDA approved ingredients, CITRYNE™ can be used on equipment without having to stop water flow. The CITRYNE formulation not only removes existing scale buildup, but will eliminate future potential scale buildup.

Citryne Water Filtration

Thank You