UNDERCOUNTER
NUGGET
ICE MACHINE

IU-0345-AN

AIR-COOLED

Serve craveable nugget ice without giving up valuable floor space. Designed to fit neatly under counters, this compact unit produces up to **350 lbs. of ice per day** and holds **100 lbs.** in reserve—ideal for busy bars, cafés, and beverage programs. The soft, **chewable nugget ice** chills quickly to maximize flavor and drink enjoyment, while **LED bin illumination** improves visibility and speeds up scooping during peak hours.

KEY FEATURES:

- High daily nugget ice production: ~350 lbs/day (70F/50F), 273 lbs/day (90F/70F)
- Large built-in storage capacity: ~100 lbs.
- Undercounter footprint (nominal): ~24" W x 26" D x 39" H
- Standard electrical: 115V / 60Hz / 1-phase
- Low operating amerage: ~9A
- Energy performance reference: ~6.5 kWh/100 lb @ 90/70
- Natural refrigerant: R290A
- Durable exterior materials: stainless steel front/side/top
- Galvanized rear panel
- Water connection size: 3/8" supply
- Drain connection size: 3/4" drain
- Standard IU control panel + USB port (FND)
- Bin features: batwing-style ice deflector; thermostat bin sensor
- Adjustable steel feet/legs: ~1" adjustability
- Unique “batwing” shaped dispenser chute inside unit ensures even nugget distribution

STANDARD WARRANTY:

- Ice Maker: 3-Year Parts & Labor
- Compressor: 5-Year Parts & 3-Year Labor

CERTIFICATIONS

IU-0345-AN

UNDERCOUNTER NUGGET ICE MACHINE

PLAN VIEW

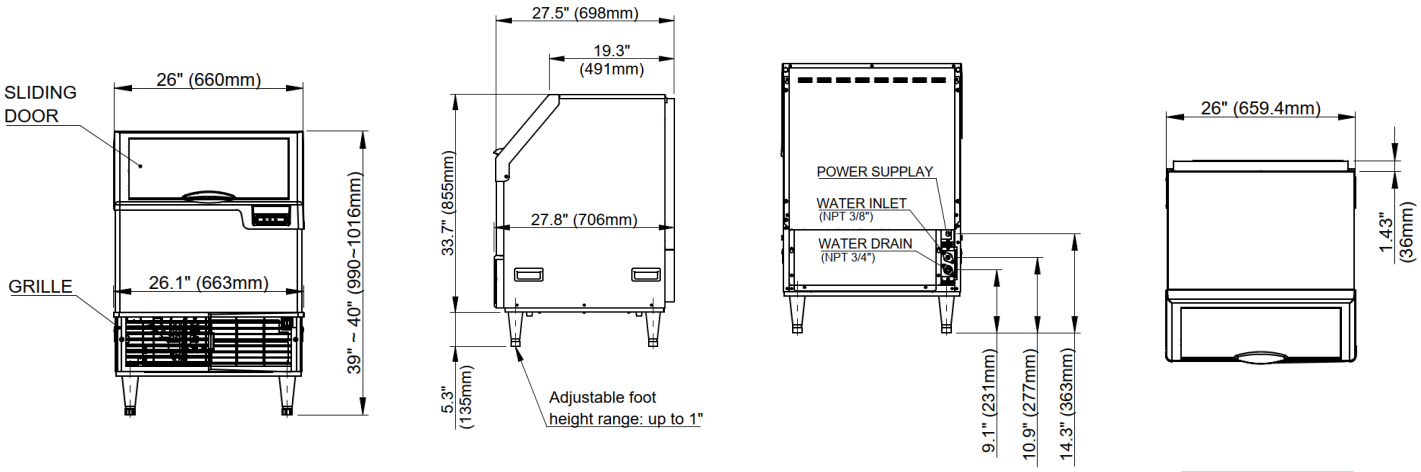

FRONT VIEW | SIDE VIEW | BACK VIEW | TOP VIEW

MODEL	DIMENSIONS	WIDTH	DEPTH	HEIGHT	WEIGHT	
IU-0345-AN	Inch	24”	26”	39”	216 lbs (Net)	238 lbs (Shipping)

SPECIFICATIONS

Model	Ice Type	Ice Production 24 hrs		Water usage gal / 100 lbs ice	Power kWh / 100 lbs ice	Electrical (V/Hz/ph)	Condenser	Minimum Circuit Breaker (A)
		Air/Water 70ºF / 50ºF	Air/Water 90ºF / 70ºF					
IU-0345-AN	Nugget	350 lbs	273 lbs	12.4	6.5	115/ 60/ 1	Air Cooled	20

OPERATING LIMITS	MIN	MAX
AMBIENT TEMP RANGE	50 ºF	100 ºF
WATER TEMP RANGE	50 ºF	90 ºF
WATER PRESSURE	20 psi (1.38 bar)	80 psi (5.52 bar)

If you love your Ice...
It’s time to love your Ice Machine!

ICE TYPE: Nugget

** Design and specifications are subject to change without prior notice.*

Follett Products, LLC
801 Church Lane
Easton, PA 18040
1-800-523-9361