Horizon Elite™

remote 1012, 1412, 1811, 1812, 2112 series Chewblet® ice machine

Model configurations			
Production capacity	Description	V/Hz/Ph	**Item number**
up to 978 lb (444 kg)	Evaporator unit for connection to remote condenser C1012CU or F1012CU.	115/60/1	**D1012R**
	Air-cooled, single phase remote condenser for use with D1012R evaporator unit. Pre-charged.	208-230/60/1	**C1012CU**
	Air-cooled, three phase remote condenser for use with D1012R evaporator unit. Pre-charged.	208-230/60/3	**F1012CU**
up to 1371 lb (622 kg)	Evaporator unit for connection to remote condenser C1412CU or F1412CU.	115/60/1	**D1412R**
	Air-cooled, single phase remote condenser for use with D1412R evaporator unit. Pre-charged.	208-230/60/1	**C1412CU**
	Air-cooled, three phase remote condenser for use with D1412R evaporator unit. Pre-charged.	208-230/60/3	**F1412CU**
up to 1784 lb 810 kg)	Evaporator unit for connection to remote condenser C1812CU.	115/60/1	**D1812R**
	Air-cooled, single phase remote condenser for use with D1812R evaporator unit. Pre-charged.	208-230/60/1	**C1812CU**
	Evaporator unit for connection to remote condenser F1811CU.	115/60/1	**D1811R**
	Air-cooled, three phase remote condenser for use with D1811R evaporator unit. Pre-charged.	208-230/60/3	**F1811CU**
up to 2039 lb (926 kg)	Evaporator unit for connection to remote condenser C2112CU or F2112CU.	115/60/1	**D2112R**
	Air-cooled, single phase remote condenser for use with D2112R evaporator unit. Pre-charged.	208-230/60/1	**C2112CU**
	Air-cooled, three phase remote condenser for use with D2112R evaporator unit. Pre-charged.	208-230/60/3	**F2112CU**

Installation kits (required)[3]		
Description	Ship wt lb (kg)	**Item number**
Installation kit for filling ice storage bins	10 (5)	**01564590**
Installation kit for filling ID50X and countertop ice and beverage dispensers	10 (5)	**01564582**
Installation kit for filling Vision™ dispensers	10 (5)	**01564632**
Installation kit for filling drop-in dispensers	10 (5)	**01564640**
Installation kit for Ice Manager™ not required. Needed components are ordered and ship with Ice Manager, see form# 1050.	N/A	**N/A**

Ice transport tube kits for RIDE installations (required), not needed for top mount applications[3]		
Description	Ship wt lb (kg)	**Item number**
For bins, countertop ice and beverage dispensers and drop-in dispensers		
RIDE installations, 10' (3 m)	10 (5)	**01560549**
RIDE installations, 35' (10.7 m)	22 (10)	**01560556**
RIDE installations, 80' (24.4 m)	60 (27)	**01560564**
For Vision dispensers		
RIDE installations, 10' (3 m)	10 (5)	**01564657**
RIDE installations, 35' (10.7 m)	22 (10)	**01564665**
RIDE installations, 80' (24.4 m)	60 (27)	**01564673**

Features

High performance Horizon Elite ice machines

- automatically transport ice through a tube with RIDE® technology from up to 75' (22.9 m) away
- consumer-preferred Chewblet ice is preferred 2:1 over cube ice
- ice dispenses reliably from ice and beverage dispensers
- quiet production without noisy harvest cycles

Revolutionary, scale inhibiting design

- produces ice that has 15% the TDS of the incoming water for optimum dispensing and long life in drinks
- quarantines and regularly expels scale producing dissolved solids to dramatically reduce scale buildup
- increases time between descaling and reduces or eliminates the need for expensive scale treatment
- uses 35% less water than comparable cubers
- contact Follett for ENERGY STAR® certified models

Durable, attractive ice machine

- regular bearing inspection or replacement is not required
- upgraded, easy-to-read LED operating status and diagnostic display

Designed with sanitation in mind

- Agion® silver-based antimicrobial product protection of key ice and water contact components[1]
- floatless, sealed design inhibits formation of biofilms
- semi-automatic cleaning and sanitizing system

Remote monitoring with Open Kitchen™

- provided in partnership with Powerhouse Dynamics (separate subscription required)
- real-time alerts and notifications
- remote diagnostics to maximize equipment uptime
- connects with equipment across other Middleby brands

Options and accessories

- refer to page 12

Warranty

- 3 years parts and labor, 5 years compressor parts[2]

Certifications (applied to all products unless otherwise noted)

- All evaporator units
- All models except D1811R
- D1811R

[1] Disclaimer: Antimicrobial protection is limited to the treated components and does not treat water or ice.
[2] Refer to form# 4025 for additional warranty information.
[3] Certifications do not apply to installation kits or ice transport tube kits.

801 Church Lane | Easton, PA 18040, USA
1.800.523.9361 | 1.610.252.7301 | follettice.com

Dimensional drawing – D1012R, D1412R, D1812R, D2112R

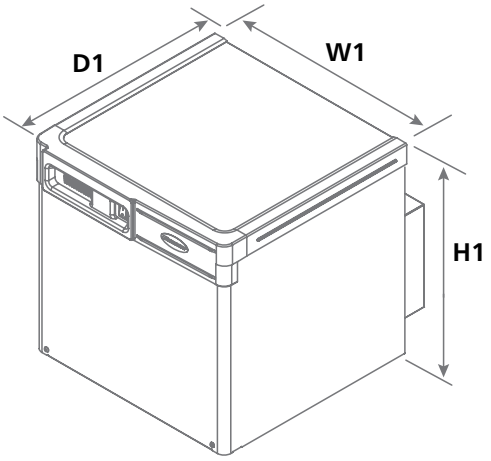

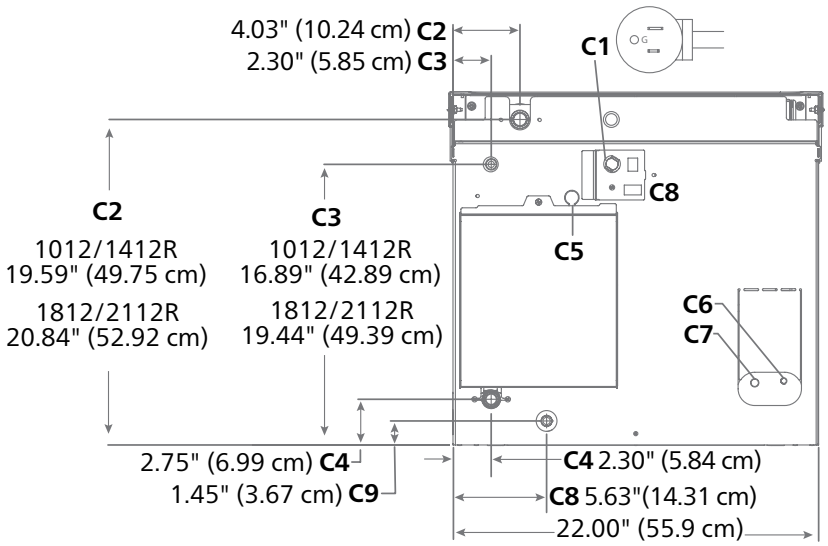

Specification, evaporator unit – D1012R, D1412R, D1812R, D2112R

W1 Width	22.70" (57.7 cm). Fits on 22.00" wide dispensers.
D1 Depth	24.84" (63.1 cm)
H1 Height	22.50" (57.2 cm)
Clearance	1.00" (2.54 cm) top, left and right. 3.00" (7.62 cm) at the rear.
C1 Electrical, 115 V/60/1	3.5 amps, requires dedicated 15 amp circuit, 6' (1.8 m) cord, NEMA 5-15 plug
Operating power	1012 and 1412 series: 0.17 kW 1812 and 2112 series: 0.21 kW
C2 Ice transport tube	see page 9 for details
C3 Water inlet	3/8" OD push-in water inlet – internal connection
C4 Drain	3/4" MPT, 1" drain required. See page 9 for details.
C5 Ice bin signal cord	for Vision applications only
C6 Liquid line	3/8"
C7 Suction line	7/8"
C8 Communication port, 24 VAC	ice machine to outdoor condensing unit (wire not included)
C9 Auxiliary drain (required)	3/8" OD push-in
Air temperature	50 -100 F (10 - 38 C)
Water temperature	45 - 90 F (7 - 32 C)
Potable water pressure	10 - 70 psi (69 - 483 kPa). **NOTE:** The potable water total dissolved solids (TDS) content must be greater than 10 ppm for the water control system to function properly.
Ice production	see ice production chart on page 11
Energy consumption 90 F (32 C) air, 70 F (21 C) water	1012 series: single phase – 3.95 kWh, three phase – 3.99 kWh 1412 series: single phase – 3.79 kWh, three phase – 3.74 kWh 1812 series: single phase – 3.94 kWh 2112 series: single phase – 4.08 kWh, three phase – 3.86 kWh per 100 lb (45.4 kg) ice
Water consumption	12.4 gal (47 L) of potable water per 100 lb (45.4 kg) of ice (per AHRI test standards). 13.9 gal (53 L) at low TDS flush setting.
Refrigerant	R449a
Approximate net weight	1012 series: 130 lb (59 kg), 1412 series: 134 lb (61 kg), 1812 series: 158 lb (72 kg) and 2112 series: 163 lb (74 kg)
Approximate ship weight	1012 series: 160 lb (73 kg), 1412 series: 164 lb (74 kg), 1812 series: 188 lb (85 kg) and 2112 series: 193 lb (88 kg)

NOTE: For indoor use only. Outdoor installation of evaporator unit is not recommended and will void warranty.

Short form specification: Follett® Horizon Elite ice machine model _____ capable of producing compressed nugget ice using an efficient, sanitary horizontal evaporator/auger system and delivering ice by a flexible wire reinforced transport tube to _____ ice storage bin, _____ ice and water dispenser, _____ countertop ice and beverage dispenser, _____ Vision dispenser, _____ drop-in dispenser or _____ Ice Manager diverter valve system. Slide-out evaporator with utility docking station, front-mounted unit status display, evaporator water inlet at harvest end with automatic flush while producing ice, and semi-automatic cleaning and sanitizing system.

Dimensional drawing – C/F1012CU, C/F1412CU, C1812CU, C/F2112CU

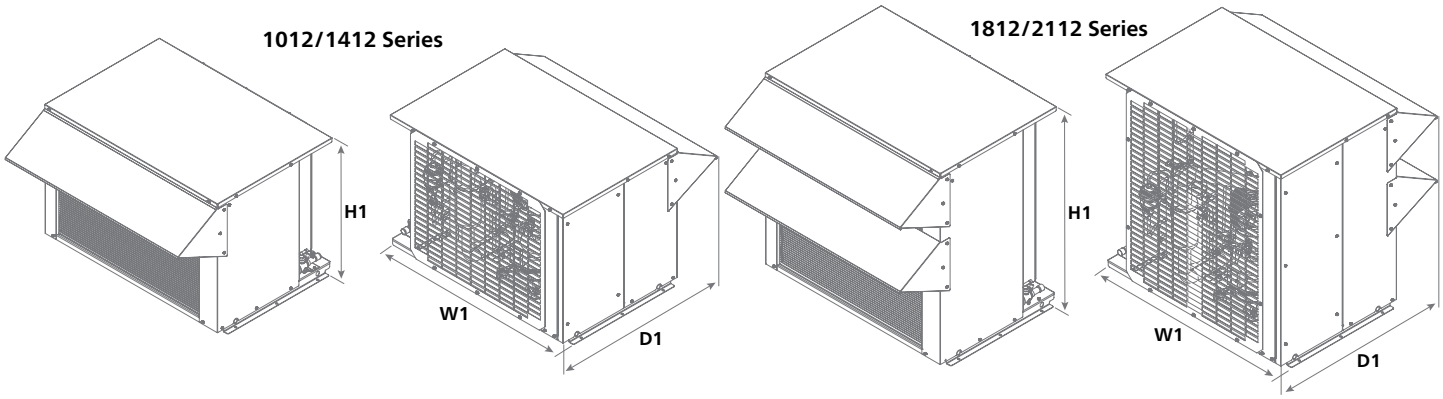

Specification, condenser unit – C/F1012CU, C/F1412CU, C1812CU, C/F2112CU

W1 Width	40.00" (101.6 cm)
D1 Depth (hail guard included)	34.00" (86.4 cm)
H1 Height	C/F1012CU and C/F1412CU: 25.25" (64.1 cm) C1812CU and C/F2112CU: 36.50" (92.7 cm)
Electrical	C1012CU, C1412CU, C1812CU, C2112CU: 208-230/60/1 F1012CU, F1412CU, F2112CU: 208-230/60/3
Operating power	C1012CU and F1012CU: 1.30 kW C1412CU and F1412CU: 1.49 kW C1812CU: 2.16 kW C2112CU and F2112CU: 2.53 kW
Minimum circuit ampacity	C1012CU: 11 A F1012CU: 10 A C1412CU: 13 A F1412CU: 11 A C1812CU: 20 A C2112CU: 23 A F2112CU: 16 A
Maximum circuit HVACR breaker size	C1012CU: 15 A F1012CU: 15 A C1412CU: 20 A F1412CU: 15 A C1812CU: 30 A C2112CU: 35 A F2112CU: 25 A
Outdoor condensing unit operating limits (air temperature)	min -20 F (-29 C) max 120 F (49 C)
Maximum refrigerant line run length	75' (22.9 m)
Maximum line rise above evaporator	35' (10.7 m)
Evaporator mounting above condenser	15' (4.6 m)
Maximum refrigeration line drop without oil trap	15' (4.6 m)
Refrigerant charge	C1012CU, F1012CU, C1412CU, F1412CU: 8 lb pre-charged at factory C1812CU, C2112CU, F2112CU: 11 lb pre-charged at factory
Approximate net weight	C1012CU and F1012CU: 205 lb (83 kg) C1412CU and F1412CU: 208 lb (94 kg) C1812CU: 252 lb (114 kg) C2112CU and F2112CU: 254 lb (115 kg)
Approximate ship weight	C1012CU and F1012CU: 268 lb (122 kg) C1412CU and F1412CU: 271 lb (123 kg) C1812CU: 319 lb (145 kg) C2112CU and F2112CU: 321 lb (146 kg)

Dimensional drawing – D1811R

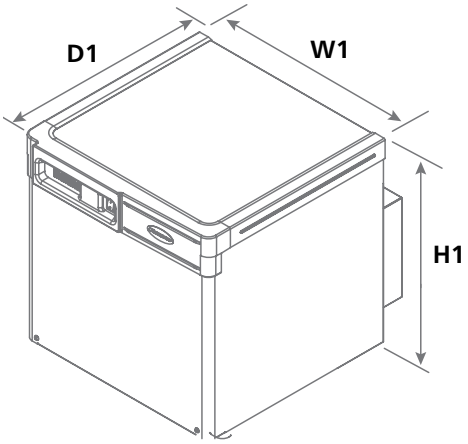

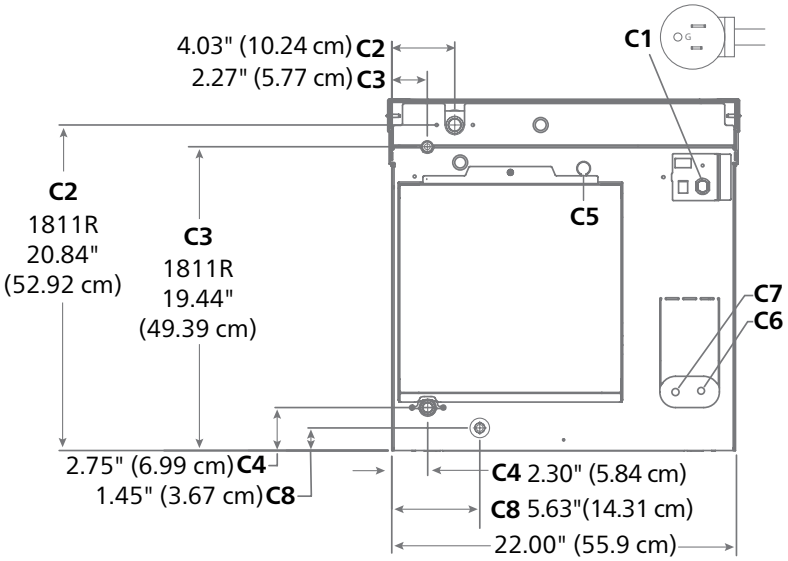

Specification, evaporator unit – D1811R

W1 Width	22.70" (57.7 cm). Fits on 22.00" wide dispensers
D1 Depth	23.70" (60.2 cm)
H1 Height	22.50" (57.2 cm)
Clearance	1.00" (2.54 cm) top, left and right. 3.00" (7.62 cm) at the rear.
C1 Electrical, 115 V/60/1	5 amps, requires dedicated 15 amp circuit, 6' (1.8 m) cord, NEMA 5-15 plug
Operating power	0.37 kW
C2 Ice transport tube	see page 9 for details
C3 Water inlet	3/8" OD push-in water inlet – internal connection
C4 Drain	3/4" MPT, 1" drain required. See page 9 for details.
C5 Ice bin signal cord	for Vision applications only
C6 Liquid line	3/8"
C7 Suction line	7/8"
C8 Auxiliary drain (required)	3/8" OD push-in
Air temperature	50 -100 F (10 - 38 C)
Water temperature	45 - 90 F (7 - 32 C)
Potable water pressure	10 - 70 psi (69 - 483 kPa). **NOTE:** The potable water total dissolved solids (TDS) content must be greater than 10 ppm for the water control system to function properly.
Ice production	see ice production chart on page 11
Energy consumption 90 F (32 C) air, 70 F (21 C) water	4.71 kWh per 100 lb (45.4 kg) ice
Water consumption	12.4 gal (47 L) of potable water per 100 lb (45.4 kg) of ice (per AHRI test standards). 13.9 gal (53 L) at low TDS flush setting.
Refrigerant	R449a
BTU/hr (Kcal/hr) at 0 F (-18 C) evaporator, 90 F (32 C) ambient air	15,700 (3,956)
Rack systems EPR valve set point EPR valve to be supplied by installer	0 F (-18 C)
Approximate net weight	136 lb (62 kg)
Approximate ship weight	195 lb (79 kg)
NOTE: For indoor use only. Outdoor installation of evaporator unit is not recommended and will void warranty.	

SHORT FORM SPECIFICATION: Follett® Horizon Elite ice machine model D1811R capable of producing compressed nugget ice using an efficient, sanitary horizontal evaporator/auger system and delivering ice by a flexible wire reinforced transport tube to _____ ice storage bin, _____ ice and water dispenser, _____ countertop ice and beverage dispenser, _____ Vision dispenser, _____ drop-in dispenser or _____ Ice Manager diverter valve system. Slide-out evaporator with utility docking station, front-mounted unit status display, evaporator water inlet at harvest end with automatic flush while producing ice, and semi-automatic cleaning and sanitizing system.

Dimensional drawing – F1811CU

1811R Series

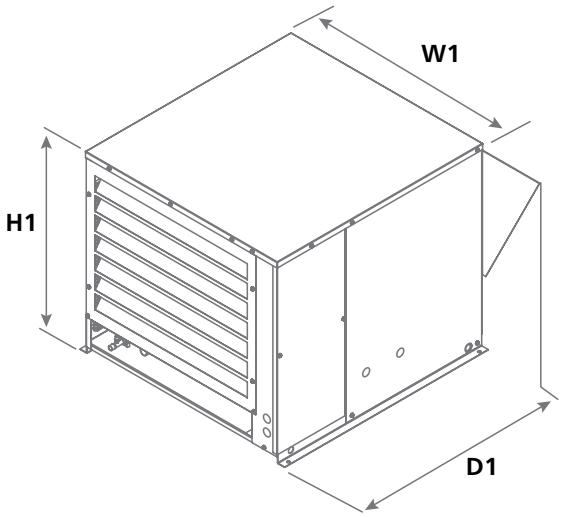

Specification, condenser unit – F1811CU

W1 Width	30.00" (76.2 cm)
D1 Depth (hail guard included)	38.50" (97.8 cm)
H1 Height	25.75" (65.4 cm)
Electrical	208-230/60/3
Operating power	3.6 kW
Minimum circuit ampacity	16.7 A
Maximum circuit HVACR breaker size	25 A
Outdoor condensing unit operating limits (air temperature)	min -20 F (-29 C) max 120 F (49 C)
Maximum refrigerant line run length	75' (22.9 m)
Maximum line rise above evaporator	35' (10.7 m)
Evaporator mounting above condenser	15' (4.6 m)
Maximum refrigeration line drop without oil trap	15' (4.6 m)
Refrigerant charge	16.5 lb pre-charged at factory
Approximate net weight	226 lb (103 kg)
Approximate ship weight	300 lb (136 kg)

1 – Locating the ice machine

Horizon Elite remote Chewblet ice machines allow top-mounting or mounting in a base cabinet, on a wall or on a floor stand up to 75' (22.9 m) from the dispenser or ice bin with RIDE technology. In-cabinet mounting (RIDE applications) require special attention to service access, unit ventilation and ice transport tube runs (see pages 6-7).

Top mounting – ice and beverage dispensers (by others)	**RIDE model – Follett low-profile Vision ice and beverage dispensers**	**Top mount on Follett ice storage bins**
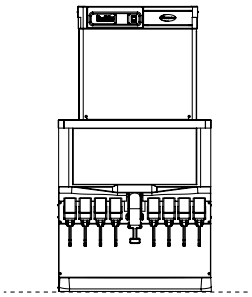	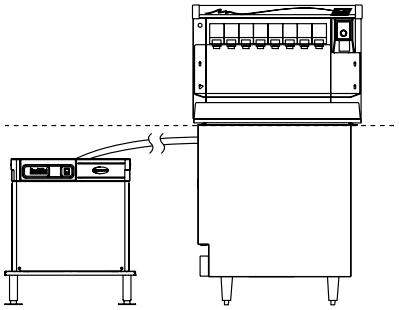	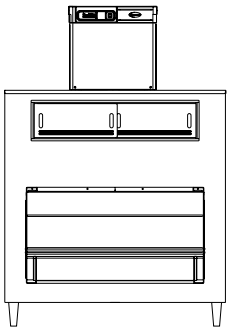
Important specifier notes	**Important specifier notes**	**Important specifier notes**
1. Dispenser must be compatible with nugget ice. See page 7 for compatible ice and beverage dispenser models and top kit numbers. 2. Verify ceiling or soffit height to ensure sufficient top clearance.	1. See page 8 for critical clearance requirements. 2. Ice transport tube ships with Vision ice and beverage dispenser (Vision applications only).	1. See form# 8590 for bin sizing. Not for use with Ice•DevIce™ or Ice Pro™. 2. Verify ceiling or soffit height to ensure top clearance. 3. Locate floor sink or grate and drains in front of storage bin.

RIDE model – ice and beverage dispensers (by others)	**RIDE model – drop-in beverage dispensers (by others)**	**RIDE model – Follett ice storage bins**
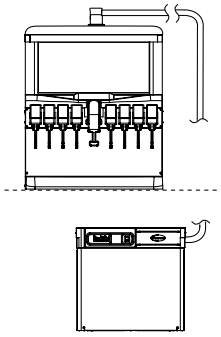	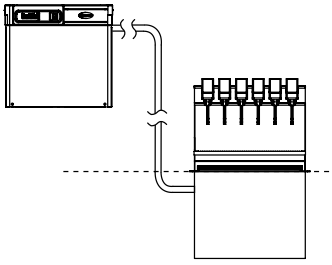	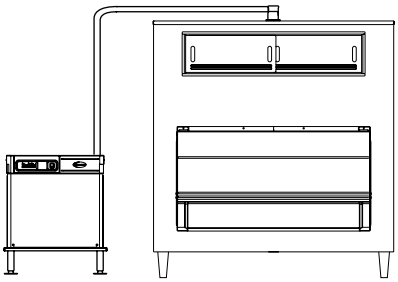
Important specifier notes	**Important specifier notes**	**Important specifier notes**
1. Dispenser must be compatible with nugget ice. Compatible dispensers include Cornelius DB/ED/DF150/175, Lancer 4500-22N, FS-16N and FS-44N, Servend MD150/175/200/250 SV150/175/200/250 and Follett Symphony Plus™ 110CM, as well as dispensers listed on page 5. 2. Coca-Cola Freestyle 7100 requires top adapter IC Code 46751 and ice kit IC Code 46430 only, and must be ordered from Coca-Cola. Coca-Cola Freestyle 9100 requires top kit HSF26SC. Consult with Coca-Cola and Follett to qualify application prior to ordering. 3. RIDE application is approved only for Pepsi Spire 3.0, 5.0 and 4.1 designed for top mount ice machines and requires MSP24SC for 3.0 and MSP30SC for 5.0 and 4.1, ordered separately. For manual fill versions of Pepsi Spire 3.0, 5.0 and 4.1, contact factory. 4. See page 8 for critical clearance requirements.	1. Compatible with the following dispensers: Cornelius 1522, 1722, 2323 and Lancer 2200, 2300, 23300. 2. Requires 12.00" (30.5 cm) of access space for installation on transport tube side. 3. See page 8 for critical clearance requirements.	1. See form# 8590 for bin sizing. Not for use with Ice•DevIce or Ice Pro. 2. Locate floor sink or grate and drains in front of storage bin.

Top mounting – compatible ice and beverage dispensers [1]

Manufacturer	Model Number	Width in (cm)	Depth [2] in (cm)	Height [3] in (cm)	Top kit
Coca-Cola dispensers	Freestyle 7000	30.10 (76.5)	33.11 (79.0)	47.00 (119.4)	H22F30-F [4]
	Freestyle 7100	30.00 (76.2)	33.80 (85.8)	47.00 (119.4)	H22F30-F [4, 5]
	Freestyle 9000	25.50 (64.8)	35.50 (90.2)	73.75 (187.3)	H22F24-F [4, 6]
	Freestyle 9100	25.50 (64.8)	39.25 (99.7)	77.2 (196.2)	H22F26-F [4]
Cornelius dispensers	DB/ED/DF 200 series	30.00 (76.2)	30.00 (76.2)	34.38 (87.3)	H22C30-F or H22C30-X [7]
	DB/ED/DF 250 series	30.00 (76.2)	30.00 (76.2)	38.38 (97.5)	H22C30-F or H22C30-X [7]
	DB/ED/DF 300 series	44.00 (111.8)	30.00 (76.2)	34.00 (86.4)	H22C44-(F or B) [8]
	FlavorFusion/Overload	30.00 (76.2)	30.70 (78.0)	39.38 (100.0)	H22C30-F-SP
	IDC215	30.00 (76.2)	30.70 (78.0)	39.38 (100.0)	H22C30-F-SP
	IDC255 and Pro Fast Gate	30.00 (76.2)	30.70 (78.0)	36.38 (92.4)	H22C30-F-SP
	IDC Pro	30.00 (76.2)	33.13 (84.2)	40.25 (102.2)	H22C30-X-PRO [9]
Lancer dispensers	4500-30N	30.00 (76.2)	30.50 (77.5)	36.50 (92.7)	H22L30-(F or B) [8]
	FS-22N	22.00 (55.9)	30.50 (77.5)	42.13 (107.0)	H22L22-F
	FS-30N	30.00 (76.2)	30.50 (77.5)	42.13 (107.0)	H22L30-(F or B) [8]
	Bevariety	30.00 (76.2)	31.00 (78.7)	37.75 (95.9)	H22L30-F-SP
	Bold 30i	30.00 (76.2)	34.25 (87.0)	43.75 (111.12)	H22L30-F-SP
	Sensation 30"	30.00 (76.2)	31.00 (78.7)	38.25 (97.2)	H22L30-F-SP
	Sensation 44" / Twin Pour	44.00 (111.8)	31.00 (78.7)	39.38 (100.0)	H22L44-F-SP
	Touchpoint	32.50 (82.55)	33.70 (85.6)	40.00 (101.6)	H22L30-F-SP
Pepsi dispensers	Spire 3.0	27.00 (68.6)	35.00 (88.9)	38.12 (96.8)	H22P24-F
	Spire 5.0 / 4.1	30.50 (77.5)	36.00 (91.4)	42.75 (108.6)	H22P30-F
Servend dispensers	SV200	30.00 (76.2)	33.13 (84.2)	37.63 (95.6)	H22S30-F
	MDH-302	42.75 (108.6)	31.00 (78.7)	32.38 (82.2)	H22S44-(F or B) [8]
	MDH-402	60.00 (152.4)	30.50 (77.5)	32.38 (82.2)	H22S60-(F or B) [8, 10]

[1] All approved dispensers can be filled with a RIDE model Horizon Elite ice machine without a top kit except for Pepsi Spire 3.0, 5.0 and 4.1, see page 4 for details.
[2] Requires minimum 0.50" (1.27 cm) clearance between back of dispenser and wall.
[3] Net height after installation of top kit (excluding height of ice machine).
[4] Consult with Coca-Cola and Follett to qualify application prior to ordering.
[5] Top adapter IC Code 46753 and ice kit IC Code 46430 must also be ordered from Coca-Cola.
[6] Adapter must also be ordered from Coca-Cola. KO IC Code: 46010 (Silver), 46011 (Red) or 46012 (Black).
[7] Top designed with flexibility to accommodate front or back mounting.
[8] Specify "F" for front facing, or "B" for backward facing units.
[9] Top designed with flexibility to accommodate front or back mounting.
[10] 60-inch models: Please specify number of Horizon Elite ice machines and location. D = 2; R = 1 on right side; L = 1 on left side.

2 – Undercounter/in-cabinet mounting

Cabinet details

Important specifier notes

1. Cabinet door opening must meet minimum size requirements shown and be free of obstructions to allow ice machine to slide out (no lip or utilities to block removal).
2. Cabinet base must be capable of supporting ice machine and allow ice machine to rest flat on cabinet bottom.
3. No counter supports, electric or plumbing can run in front of the ice machine.

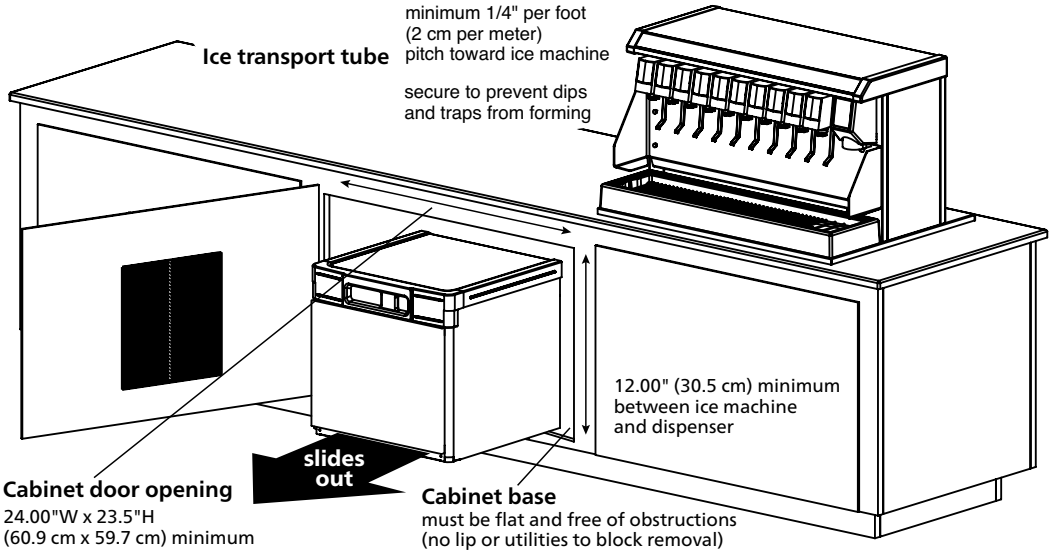

3 – Horizon Elite ice machine mounting accessories

Optional wall mount bracket

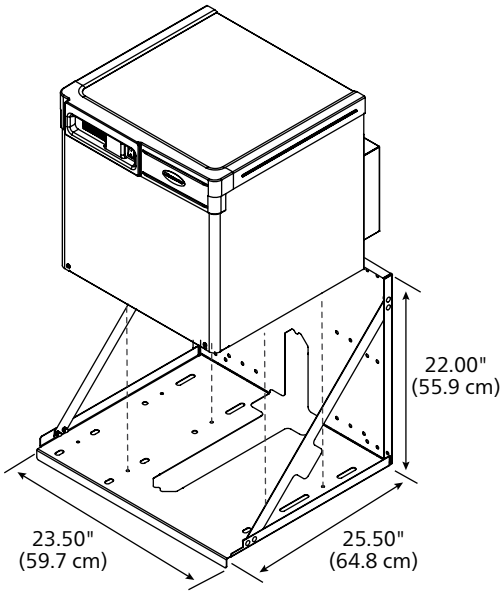

Optional machine stand

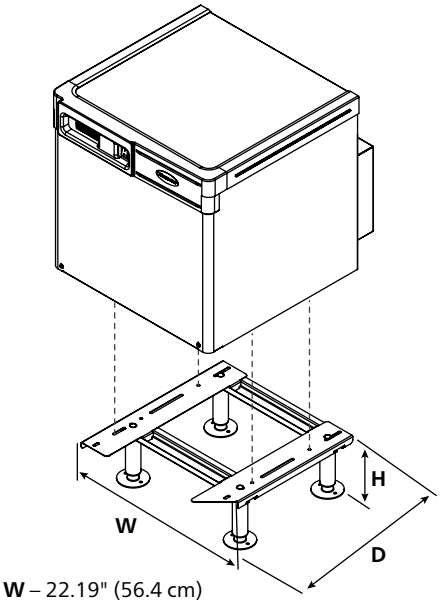

W – 22.19" (56.4 cm)
D – 21.00" (53.3 cm)
H – 6.80" – 8.30" (17.3 cm – 21.1cm)

Important specifier notes

1. For secure wall mounting, specify optional wall mount bracket.
2. Wall and fasteners must support the weight of the ice machine, bracket, supply water and ice. Use of a backing board may be required with hollow wall construction.
3. Machine stand mounting adds 6.88" (17.5 cm) to height of ice machine.
4. No dips in tube routing allowed.
5. Ice transport tube needs minimum 1/4" per foot (2 cm per meter) pitch toward ice machine and should be secured to prevent dips and traps from forming.

4 – Horizon Elite drains - specifier guidelines

Ice machine drain plumbing	Important specifier notes: Where code allows, follow recommendation below.
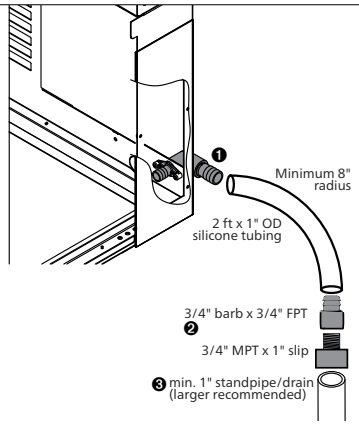	1. Apply Teflon tape to 3/4" male outlet ice machine fitting. Thread on either the provided straight 3/4" barb adapter or a 90 degree adaptor. Connect the supplied 2' (0.61 m) silicone hose to the 3/4" drain barb ❶. 2. It is recommended that the silicone hose be routed down into a 1.5" or 2.00" standpipe/drain. The minimum drain size for the ice machine is 1.00". NOTE: 3/4" to 1" PVC adapter fittings are provided if a larger drain size is not possible ❷ ❸. NOTE: Minimum 8.00" (20.3 cm) radius on silicone drain line. Drain line from the ice machine must have at least 1/4" per foot pitch (6.4 mm/0.3 m). NOTE: Standpipe/drain provided by others. All other components provided with ice machine.

Chassis drain plumbing – Required	Important specifier notes: Where code allows, follow recommendation below.
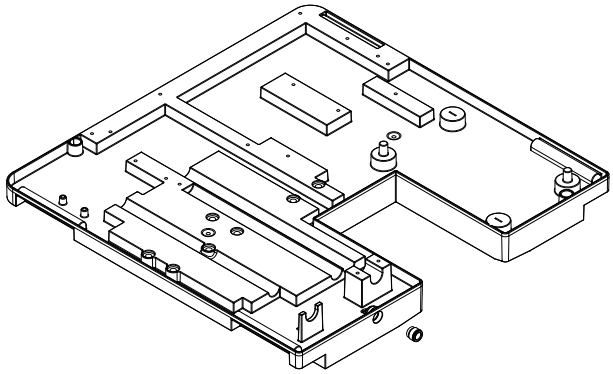	1. Route 3/8" drain tubing through knockout in back of docking station and insert fully into John Guest fitting connection at the rear of the machine chassis. Route other end of 3/8" drain tubing to drain. 2. Drain must slope 1/4" inch per foot (6 mm per 30.4 cm).

5 – Horizon Elite ice tube runs - specifier guidelines

Long tube runs for RIDE remote ice delivery equipment

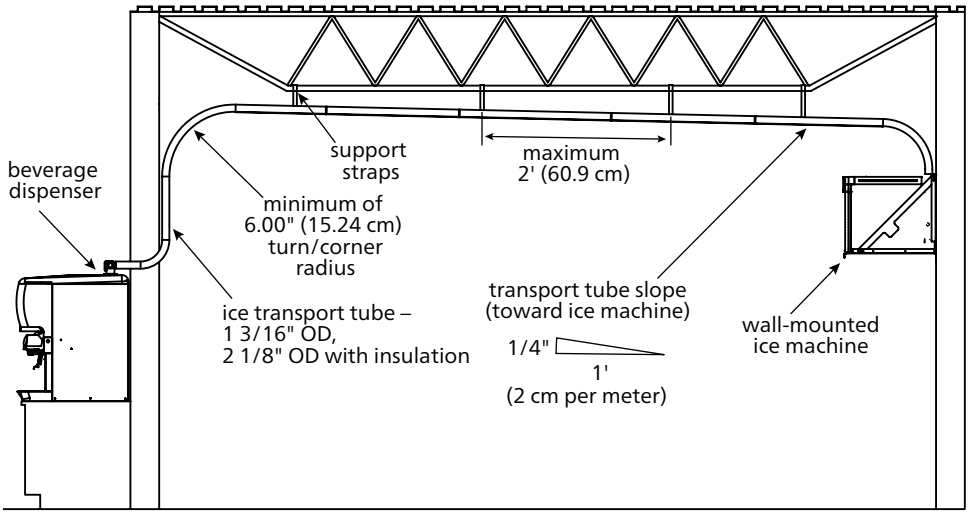

Important specifier notes

1. 75' (22.9 m) maximum ice transport tube run.
2. Tubing routing bends must have a 6.00" (15.24 cm) radius or larger.
3. Dips and traps are not allowed. A 3.00" (7.62 cm) or larger PVC pipe chase is suggested to support the tubing run. If not supported, secure insulated ice transport tube at least every 2' (0.61 m) to prevent dips and traps.
4. Relative humidity levels above 80% in areas where the ice machine or ice transport tube is located may produce excessive condensation that will cause water damage.
5. Contact factory for recommendations on running tubing through a decorative soffit or chase.

Remote condensing unit

Condensing unit installation specifications

Important specifier notes

1. Provide front, back, top and side clearances as shown.
2. The maximum refrigerant line run length is 75' (22.9 m).
3. Refrigerant:

   8 lb of refrigerant is pre-charged at the factory for item number C/F1012CU and C/F1412CU.

   16.5 lb of refrigerant is pre-charged at the factory for item number F1811CU.

   11 lb of refrigerant is pre-charged at the factory for item number C1812CU and C/F2112CU.
4. The maximum line rise above the evaporator is 35' (10.7 m). Condensing unit above evaporator unit – 35' (10.7 m) (installations with rise over 20' (6.1 m) require additional suction line s-trap at midpoint rise) and p-trap at top of riser.
5. The evaporator can only be mounted a maximum of 15' (4.6 m) above the condensing unit.
6. P-trap required at bottom of suction riser.

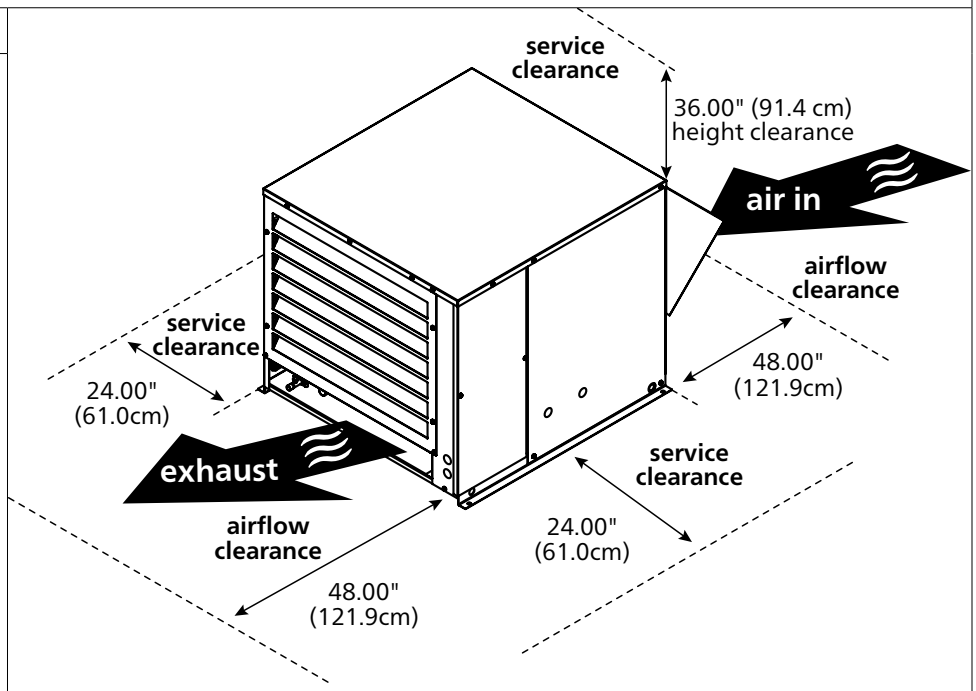

Ice production

Ice production – Horizon Elite D1012R series

Inlet water temperature F (C)	Ambient air temperature F (C)					
	50 (10)	60 (16)	70 (21)	80 (27)	90 (32)	lb (kg) production in 24 hr
50 F (10 C)	1128 (511)	1089 (494)	1051 (477)	1021 (463)	991 (450)	
60 F (16 C)	1040 (472)	1012 (459)	984 (446)	962 (436)	940 (426)	
70 F (21 C)	953 (432)	935 (424)	917 (416)	903 (410)	889 (403)	
80 F (27 C)	896 (406)	883 (400)	869 (394)	851 (386)	832 (377)	
90 F (32 C)	839 (380)	830 (376)	821 (372)	798 (362)	775 (352)	

Ice production – Horizon Elite D1412R series

Inlet water temperature F (C)	Ambient air temperature F (C)					
	50 (10)	60 (16)	70 (21)	80 (27)	90 (32)	lb (kg) production in 24 hr
50 F (10 C)	1304 (592)	1297 (589)	1291 (586)	1253 (569)	1216 (552)	
60 F (16 C)	1231 (558)	1220 (553)	1209 (548)	1173 (532)	1137 (516)	
70 F (21 C)	1158 (525)	1143 (518)	1127 (511)	1093 (496)	1059 (480)	
80 F (27 C)	1097 (498)	1068 (484)	1039 (471)	1020 (463)	1000 (454)	
90 F (32 C)	1036 (470)	994 (451)	952 (432)	947 (429)	942 (427)	

Ice production – Horizon Elite D1811R series

Inlet water temperature F (C)	Ambient air temperature F (C)					
	50 (10)	60 (16)	70 (21)	80 (27)	90 (32)	lb (kg) production in 24 hr
50 F (10 C)	1708 (775)	1699 (771)	1690 (767)	1619 (734)	1547 (702)	
60 F (16 C)	1606 (728)	1594 (723)	1582 (718)	1514 (687)	1447 (656)	
70 F (21 C)	1503 (682)	1488 (675)	1473 (668)	1410 (640)	1346 (611)	
80 F (27 C)	1422 (645)	1408 (639)	1395 (633)	1332 (604)	1269 (576)	
90 F (32 C)	1341 (608)	1329 (603)	1316 (597)	1254 (569)	1192 (541)	

Ice production – Horizon Elite D1812R series

Inlet water temperature F (C)	Ambient air temperature F (C)					
	50 (10)	60 (16)	70 (21)	80 (27)	90 (32)	lb (kg) production in 24 hr
50 F (10 C)	1864 (846)	1839 (834)	1814 (823)	1734 (787)	1653 (750)	
60 F (16 C)	1740 (789)	1716 (778)	1691 (767)	1622 (736)	1553 (704)	
70 F (21 C)	1616 (733)	1592 (722)	1567 (711)	1510 (685)	1452 (659)	
80 F (27 C)	1523 (691)	1500 (681)	1478 (670)	1425 (646)	1372 (622)	
90 F (32 C)	1430 (649)	1409 (639)	1388 (630)	1340 (608)	1292 (586)	

Ice production – Horizon Elite D2112R series

Inlet water temperature F (C)	Ambient air temperature F (C)					
	50 (10)	60 (16)	70 (21)	80 (27)	90 (32)	lb (kg) production in 24 hr
50 F (10 C)	2023 (918)	1993 (904)	1963 (890)	1899 (861)	1834 (832)	
60 F (16 C)	1914 (868)	1881 (853)	1847 (838)	1796 (815)	1745 (791)	
70 F (21 C)	1805 (819)	1769 (802)	1732 (786)	1693 (768)	1655 (751)	
80 F (27 C)	1703 (773)	1658 (752)	1612 (731)	1594 (723)	1575 (714)	
90 F (32 C)	1602 (726)	1547 (702)	1493 (677)	1494 (678)	1495 (678)	

Options and accessories[1]

- ☐ Top kit for ice and beverage dispensers (page 7)
- ☐ Wall mount bracket (item# 01600139)
- ☐ Ice machine stand, height-adjustable (item# 00997080)
- ☐ Timer to control one or two ice machines (item# 00967265)
- ☐ Sleep cycle kit for countertop dispenser applications for improved energy efficiency and component life (item# 01338276)
- ☐ 35' (11 m) insulated refrigeration lines (not pre-charged) (item# 00977785)
- ☐ One-year remote monitoring subscription and hardware for Open Kitchen (item# MDD-1003)
- ☐ Water filters (refer to form# 1058)
- ☐ SafeCLEAN Plus™ ice machine cleaner (refer to form# 8295)
- ☐ Additional accessories (refer to form# 4025)

[1] Certifications do not apply to options and accessories.

ENERGY STAR and the ENERGY STAR mark are registered trademarks owned by the U.S. Environmental Protection Agency.
Agion is a registered trademark of Sciessent LLC.
Open Kitchen is a trademark of Powerhouse Dynamics.
HORIZON ELITE, ICE•DEVICE, ICE MANAGER, ICE PRO, SAFECLEAN PLUS, SANISPONGE, SYMPHONY PLUS and VISION are trademarks of Follett Products, LLC.
CHEWBLET, FOLLETT and RIDE are registered trademarks of Follett Products, LLC, registered in the US.
Follett reserves the right to change specifications at any time without obligation. Certifications may vary depending on country of origin.

1059-20261006 | © Follett Products, LLC

801 Church Lane | Easton, PA 18040, USA
1.800.523.9361 | 1.610.252.7301 | follettice.com