FZR1/FZR2

High-Performance Compact Freezers

Installation, Operation and Service Manual
Serials numbers after H55798

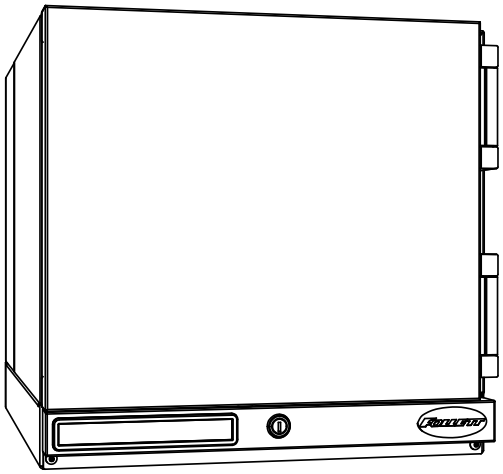

FZR1

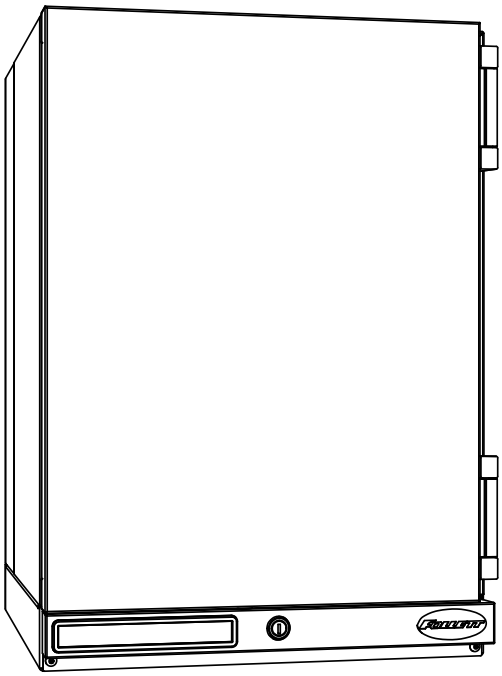

FZR2

Following installation, please forward this manual to the appropriate operations person.

801 Church Lane • Easton, PA 18040, USA
Toll free (877) 612-5086 • +1 (610) 252-7301
www.follettice.com

Order parts online:
www.follettice.com

01069798R11

Contents

Welcome to Follett **3**
Before you Begin 3
Specifications **3**
Dimensions 3
Electrical Specifications 3
Refrigeration Specifications 3
Heat Rejection 3
Ambient Information 3
Installation **4**
Locating the Freezer 4
Installing Shelves - FZR2 only 5
Installing Glycerine Solution in Product Simulation Bottle - Required 5
Battery Backup (KP models only) 6
Reversing the Door Swing – Optional 6
Adjusting Hinge Closure Force 9
Installing Third-party Temperature Probe 10
Cleaning **12**
Annual Cleaning 12
Operation **12**
Temperature Control 13
Defrosting 13
Controller Operation **13**
Controller Display 13
Controller Security 14
Changing Temperature Display from C to F 14
Changing Temperature Display from Decimal to Integer 14
Sleep Function 14
Minimum and Maximum Temperature Function 14
Alarming Functions 14
Follett Keypad Lock (KP models only) 17
Service **18**
Door Gasket Replacement 18
Access Compressor Compartment 18
Changing the Back-up Batteries 18
Controller Replacement 19
Refrigeration System 19
Checking Refrigeration System Pressures 19
Compressor Information 20
Defrost Heater Information 20
Wiring Diagram 21
Freezer Troubleshooting **22**
Accessories **23**
Temperature Surveillance Module Accessory (P/N 00168674) 23
Temperature Alarm Accessory (P/N 00112185) 23
Glycerine - 16 oz. bottle (P/N 00959296) 23
Wall-mount Kit (P/N 00969949) 23
Remote Alarm Contact Accessory (P/N 01092022) 23
Replacement Parts **24**
Hardware 25
Evaporator 26
Compressor Components 27
Control Board 28

Welcome to Follett

Follett equipment enjoys a well-deserved reputation for excellent performance, long-term reliability and outstanding after-the-sale support. To ensure that this product delivers that same degree of service, we ask that you take a moment to review this manual before beginning the installation. Should you have any questions or require technical help at any point, please call our technical service group at (877) 612-5086 or (610) 252-7301.

Before you Begin

After uncrating and removing all packing material, inspect the equipment for concealed shipping damage. If damage is found, notify the shipper immediately and contact Follett Corporation so that we can help in the filing of a claim, if necessary.

Check your paperwork to determine which item number you have. Follett item numbers are designed to provide information about the type of freezer you are receiving.

Specifications

Dimensions

	FZR1	FZR2
Dimensions (external)	18.6" W x 24" D x 17.93" H (47 cm x 61 cm x 46 cm)	18.6" W x 24" D x 27.93" H (47 cm x 61 cm x 71 cm)
Dimensions (internal)	14.6" W x 11.6" D x 5.72" H (37 cm x 29 cm x 14.6 cm)	14.6" W x 11.6" D x 15.72" H (37 cm x 29 cm x 40 cm)
Shelf Size	NA	13.75 W x 9 D (35 cm x 23 cm)
Capacity	0.6 cu ft (16 L)	1.6 cu ft (44 L)
Weight (uncrated)*	86 lbs (39 kg)	104 lbs (47 kg)

* Add 22 lbs/10 kg for packaging.

Electrical Specifications

- 115 V, 60 Hz, 1 phase
- Full load: 4.1A
- Minimum circuit ampacity: 15A
- Connect to dedicated circuit, fuse or breaker
- Maximum size of branch circuit overcurrent device: 15A
- Follett recommends circuit be protected by GFCI

Refrigeration Specifications

Refrigerant	Charge Size (oz)	Maximum Design Pressures (psi)	
		High Side	Low Side
R404A	9.2	461	143

Heat Rejection

- 875 BTU/hr (256 W) maximum

Ambient Information

CAUTION!
The FZR1 and FZR2 are for indoor use only.

	Optimum	Maximum
Air Temperature	≤80 F (27 C)	100 F (38 C)
Relative Humidity	60% max	

Installation

Locating the Freezer

Performance of FZR1 and FZR2 is affected by ambient temperature and location. To ensure proper performance, please refer to the following drawings and confirm that the clearance requirements are met. There is no clearance requirement for the back of the freezer so it can be placed against the wall.

80 F (27 C) and 60% RH – located under overhanging cabinet or shelf with zero top clearance
Requires 6" (15.3 cm) clearance on either right or left side

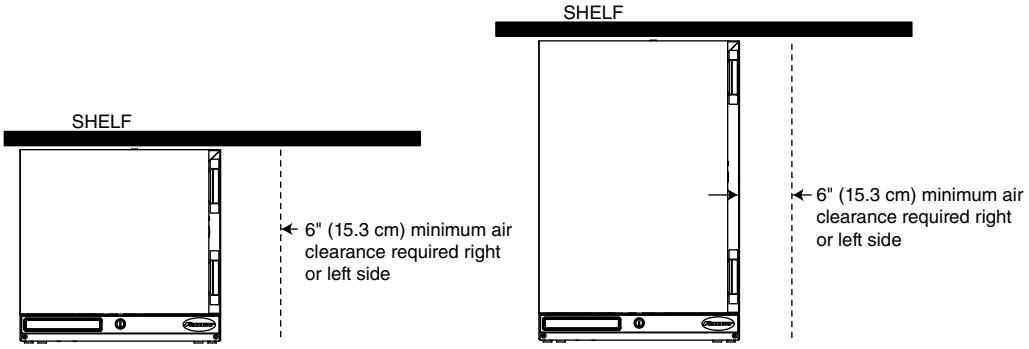

80 F (27 C) and 60% RH – unrestricted top clearance location
Requires 2" (5.1 cm) clearance on both sides and unrestricted top clearance (12" (30.5 cm) min above unit)

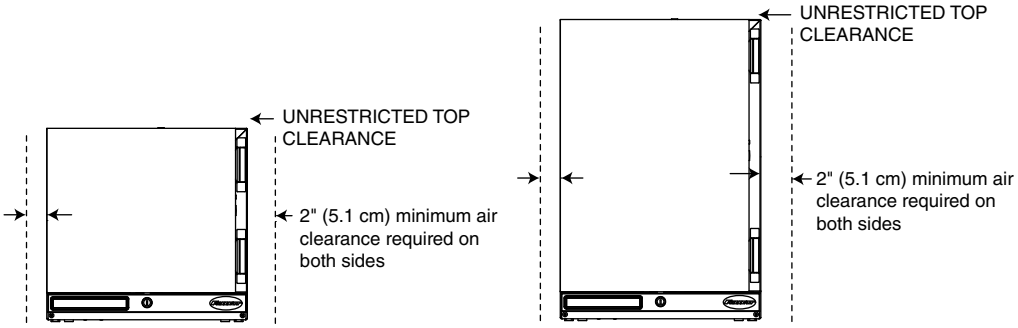

100 F (38 C) – maximum temperature location with zero top clearance
Requires 6" (15.3 cm) clearance on both sides

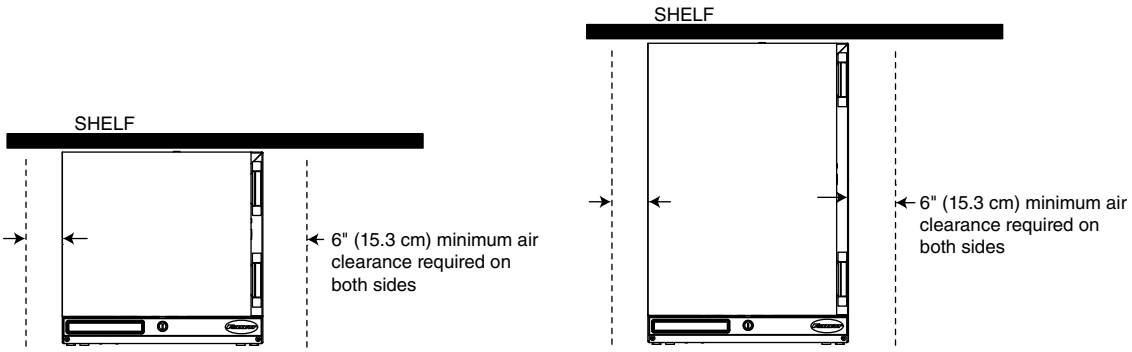

Installing Shelves - FZR2 only

1. Remove shelves and shelf brackets packed inside freezer. (If ordered, find additional shelf accessory in separate box.)
2. Install shelf brackets in pilasters (insert top tab, squeeze and push in lower tab) **(Fig. 1)**.

Fig. 1

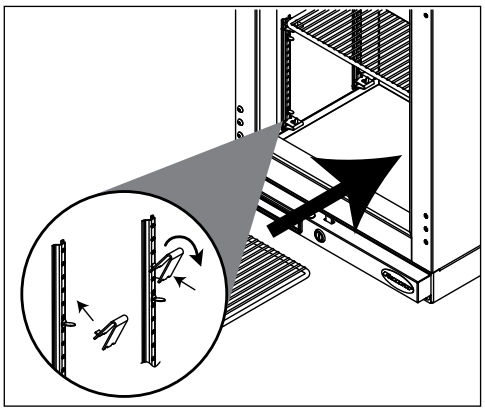

Installing Glycerine Solution in Product Simulation Bottle - Required

1. Remove the bottle from the bracket located in the upper right corner of the freezer **(Fig. 2)**.
2. Remove the top and fill the bottle with a 60/40 solution of glycerine and water.
3. Replace the top (and probe).
4. Reinsert bottle into the bracket.

Note: If you are using this in a food service application, and installing in accordance with NSF, you must remove the probe from the bottle. NSF requires that air temperature be displayed.

5. Plug in the freezer and return the power switch to ON **(Fig. 3)**.

Fig. 2

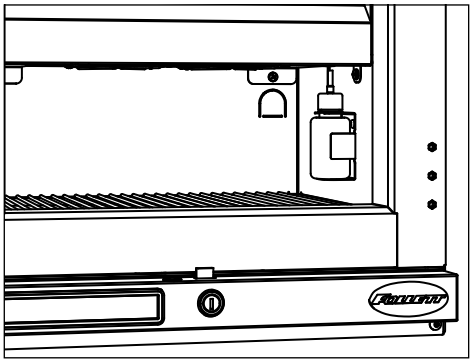

Fig. 3

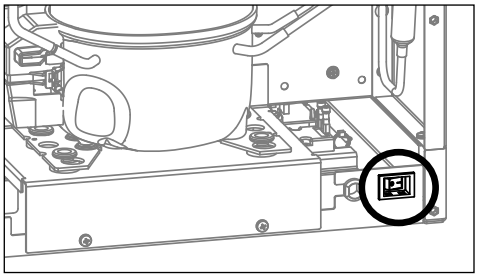

Battery Backup (KP models only)

1. Provide power to the unit and turn the power switch to the **ON** position.
2. Open the door using the keypad lock and prop the door open so it doesn't close during the battery installation.
3. Turn power switch to the **OFF** position or unplug the unit from the power supply.
4. Remove the two screws **(Fig. 4.1)** on the front panel at the bottom of the unit.
5. Remove the front panel.

Note: Take care when removing, some wires are connected to the front panel (Fig. 4.2).

6. Find the battery pack on the right-hand side of the front panel.
7. Pull the battery pack and the battery connector away from the hook and loop patch on the front panel **(Fig. 4.3)**.
8. Connect the battery connector with the black and red wires to the top of the battery pack.
9. Place the battery pack back in place firmly on the hook and loop patch.
10. Re-install the front panel.
11. Close the door.
12. Test operation of the keypad lock while the power to the unit is **OFF** to confirm back-up battery connection.
13. Turn the power switch **ON** or plug the unit back into the power supply.

Fig. 4

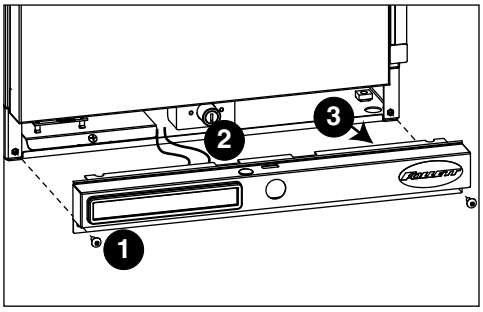

Reversing the Door Swing – Optional

WARNING!

For protection, safety goggles (and/or face shield) should be worn when removing and/or installing the hinge spring.

1. Use flat screwdriver to carefully remove hinge covers **(Fig. 5)**.

Fig. 5

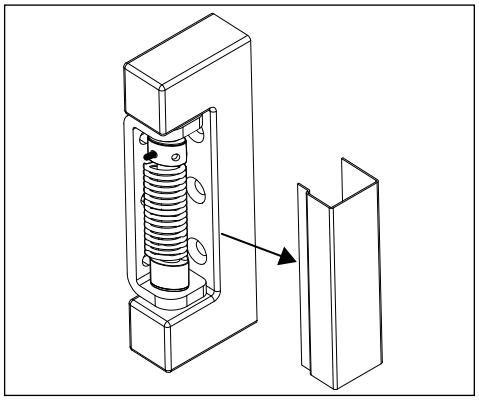

2. Using a small Phillips screwdriver, allen key or drift pin, rotate top of spring assembly (counter-clockwise for right-hand hinged doors) **(Fig. 7.1)** to remove the pin **(Fig. 6.2)**.
3. Relieve torque on the spring.

Fig. 6

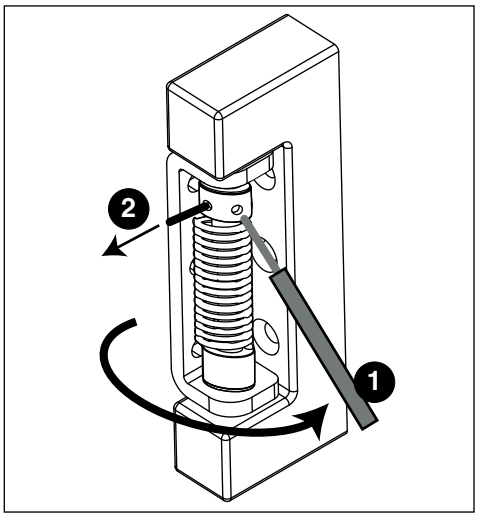

4. With a flat-head screwdriver, simultaneously push down and pry the top of the spring from out of the top of the hinge **(Fig. 7)**.

Fig. 7

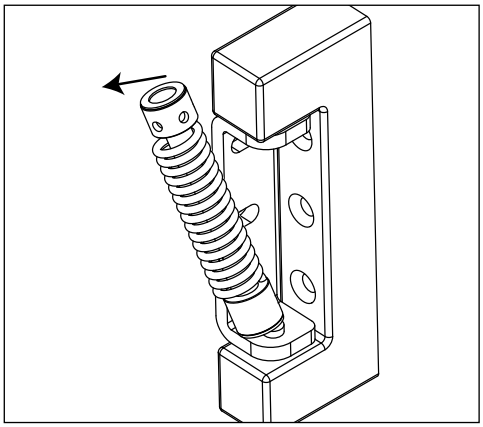

5. Support door and remove screws attaching hinge to freezer cabinet and remove the door **(Fig. 8)**.
6. Cover hinge screw holes with screws removed from opposite side of door and door frame.

Fig. 8

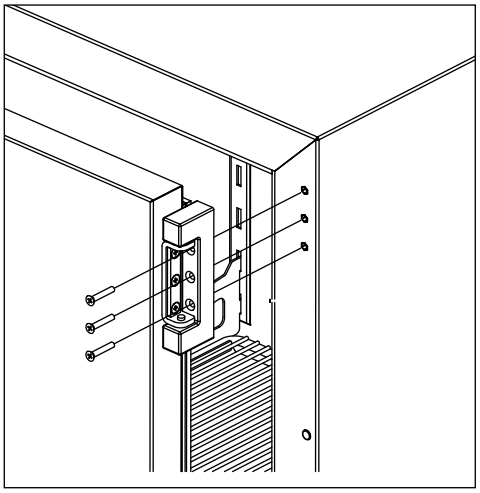

7. Remove screws holding lock strike-bracket at "bottom" inside of door **(Fig. 9.1).**
8. Remove screws from inside of door "top" and install bracket.
9. Plug "bottom" holes with retained screws and install lock strike-bracket to "top" inside of door **(Fig. 9.2)**.
10. Reverse door 180° so that lock strike-bracket is on the bottom inside of door **(Fig. 9.3)**.

Fig. 9

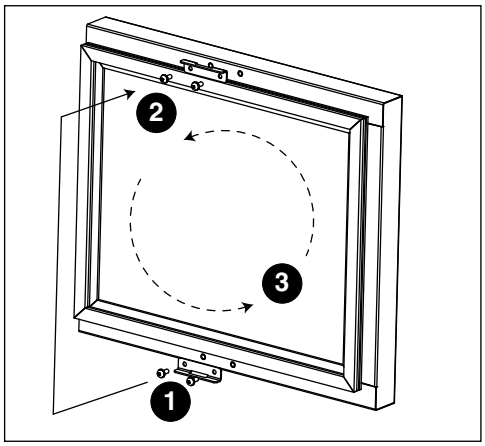

11. Reinstall the door on the opposite side of the doorframe. Adjust if needed.
12. Reinstall screws (torqued to 25 in-lbs) **(Fig. 10)**.

Fig. 10

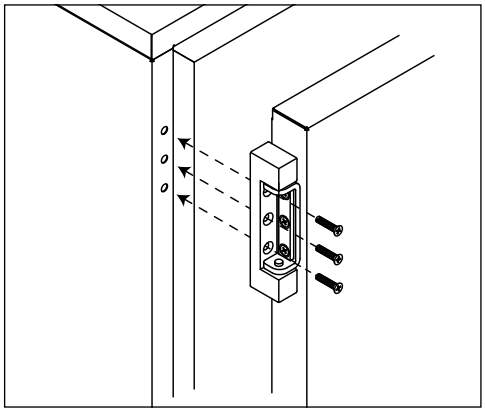

13. Insert bottom of spring kit onto bottom hinge pin **(Fig. 11)**.

Fig. 11

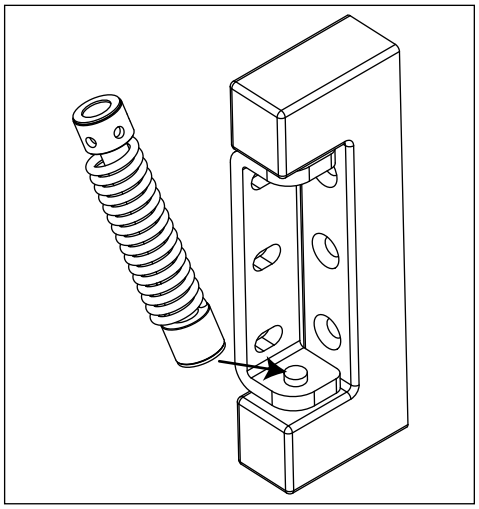

14. Insert tool as shown and press down on both sides of tool **(Fig. 12.1)** to compress spring kit**,** then insert top of spring kit onto top hinge pin **(Fig. 12.2)**.

Fig. 12

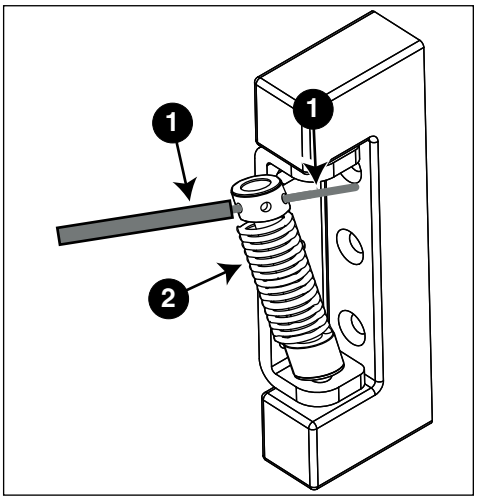

Adjusting Hinge Closure Force

1. Remove the tool and insert it (Phillips screwdriver, Allen key, drift pin) into hole nearest the hinge bracket **(Fig. 13)**.

Fig. 13

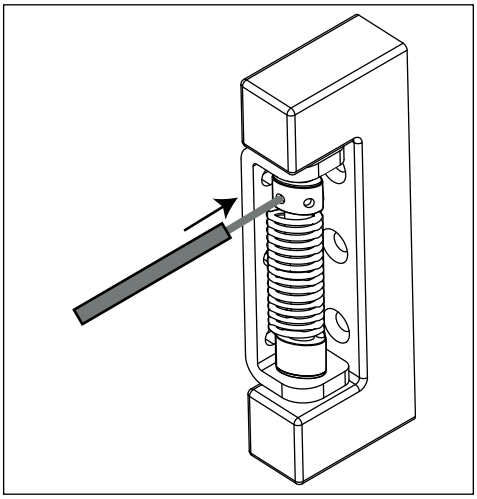

2. Rotate top of spring counter-clockwise to increase the spring torque **(Fig. 14)**.

Fig. 14

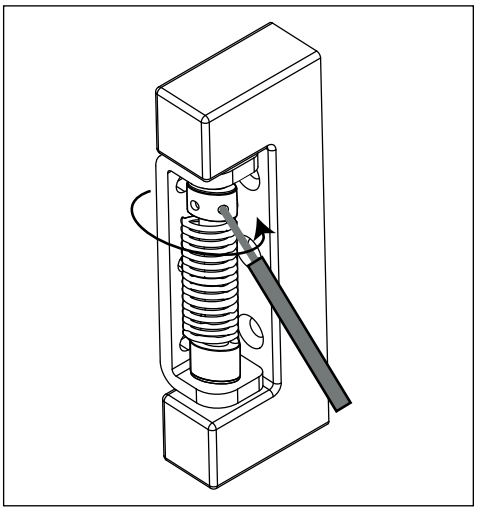

3. Insert pin into an open hole nearest the hinge bracket **(Fig. 15.1)**, and remove the tool used to torque the spring **(Fig. 15.2**).
4. Repeat Steps 2 and 3 until desired closure force is achieved.

CAUTION!
Do not overtorque the spring unnecessarily. Minimum closure force should close door when door is opened 1" (2.5 cm).

Fig. 15

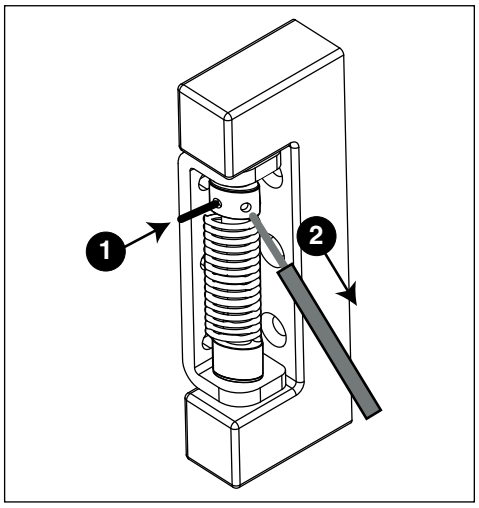

5. Reinstall hinge cover **(Fig. 16)**.

Fig. 16

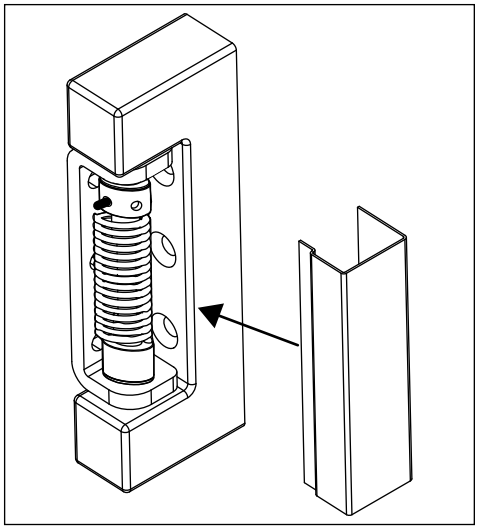

Installing Third-party Temperature Probe

Facilities using a third-party alarming and/or temperature monitoring system need to install the third-party probe in the freezer. Follett recommends removing any stored product before performing this procedure.

1. Move the power switch on lower rear panel to OFF and unplug the freezer.
2. Remove the rear panel of the freezer **(Fig. 17)**.
3. Open front door of freezer and remove shelf/shelves, if installed, for better access.

Fig. 17

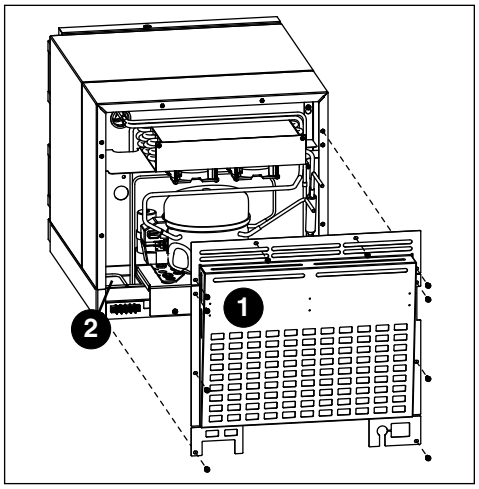

4. From inside the freezer, push and fold the perforated cut out located on the inside, upper-right hand corner **(Fig. 18)**.
5. Use a long screwdriver or drill to create a hole (up to 1" (25.4 mm) diameter) through the exposed foam insulation.
6. From inside the freezer, feed non-probe end of wire through opening **(Fig. 19)**.
7. Secure probe to interior cabinet wall to avoid product interference.
8. Gently pull on non-probe end of wire to remove slack from inside of freezer.
9. Use Permagum* or equivalent sealant to replace foam insulation (removed in Step 5) to ensure proper performance of freezer.
10. Remove any debris that may have fallen into the drain pan or condensor area.
11. Route non-probe end of wire through appropriate ventilation hole in freezer rear panel.
12. Reinstall the rear panel.
13. Connect non-probe end of wiring to monitoring device.
14. Plug in the freezer and return the power switch to ON.

* Permagum is a registered trademark of the Presstite Engineering Company.

Fig. 18

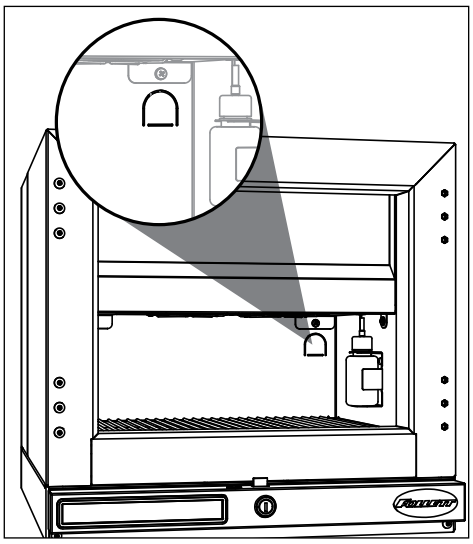

Fig. 19

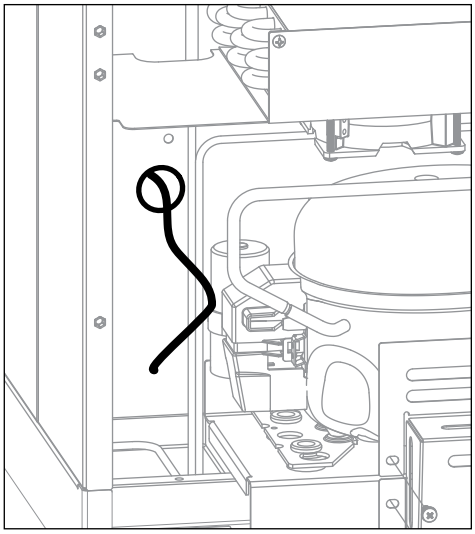

Cleaning

CAUTION!
Use only non-chlorine-based cleaners. Use of cleaners containing chlorine can cause staining and pitting of the stainless steel

Interior

Using a sponge or soft cloth, clean unit with a non-abrasive, non-chlorinated, all-purpose detergent.

Exterior

Wipe exterior with a soft cloth in the direction of grain as needed. Stainless steel polish may be used to enhance the finish of the unit.

Annual Cleaning

Removal of dust and other particulates from air intake areas and the condenser is important for proper operation. Under certain conditions, some environments with large amounts of dust may require more frequent cleaning.

1. Move the power switch on lower rear panel to OFF and unplug the freezer.
2. Remove rear panel **(Fig. 20.1)**.
3. Clean drain pan **(Fig. 20.2)** with a non-abrasive, non-chlorinated all-purpose detergent.
4. Use a vacuum cleaner with brush attachment to clean condenser, compressor motor, and related parts.
5. Reinstall rear panel.

Fig. 20

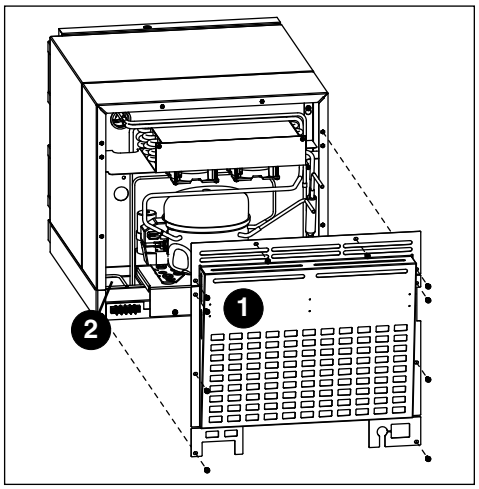

Operation

The temperature control board and probe (P1) indicate when the refrigeration system is required to turn on and off.

The refrigeration system removes heat from the cabinet interior and rejects it to the surrounding room air. When the cabinet interior temperature rises above the controller cut-in temperature, the controller turns the refrigeration system on. The controller energizes the evaporator fan and solid-state control relay which energizes the condensing unit. The compressor uses a current-style starting relay and a starting capacitor to start the compressor motor.

When the cabinet interior falls below the predetermined cut-out temperature, read by the P1 (control probe), the controller de-energizes the solid state compressor relay and condenser fan motor. The evaporator fan continuously runs to acheive desired product temperature.

Any accumulated frost on the evaporator coils melts during the electric defrost cycle. The condensate drains out of the unit to the condensate tray to the left of the condensing unit. The heat from the condensing unit evaporates any condensate in the drain pan.

Temperature Control

The temperature control system is preset by the factory to maintain a product temperature of –28 C (–18 F). If desired, the set-point temperature can be raised as high as –17 C (0 F) by following the instructions in *Controller Operation* for changing the temperature set point.

Defrosting

This unit is equipped with an electric defrost circuit designed to keep the evaporator “frost free”. Defrost cycles are automatically initiated every six (6) hours. The cycle is terminated following a maximum twenty (20) minute duration, or when the evaporator surface reaches a temperature of 5 C (41 F) as measured by defrost P2 probe. During defrost there will be warmup in cabinet temperature, but the stored product will remain below –15 C (5 F) with the setpoint at the factory default of –28 C (–18 F).

Controller Operation

The controller is pre-programmed with a –28 C (–18 F) set point. If this set point does not meet your specific application needs, instructions for changing the set point are found below.

Controller Display

In normal operation, the controller displays simulation bottle temperatures in degrees celsius (C) or user-selected degrees fahrenheit (F). Temperatures can be displayed to one decimal point.

The controller has system indicators above the temperature display to let you know when: the compressor is energized (**COMP**), the evaporator fan is energized (**FAN**) or the unit is in defrost (**DEF**).

To display temperature Set-point		
Step	**Input**	**Display**
1	Press and release **SET**	Current set-point temperature will display for approximately 5 seconds. Display will return to current product temperature.

To change temperature Set-point		
Step	**Input**	**Display**
1	Press and hold **SET** for 3 seconds	Set-point will flash.
2	Press **UP** or **DOWN** arrows to desired set-point	New temperature set-point will flash on the display.
3	Press and release **SET** to accept	Product temperature will display.

The compressor cut-in temperature is determined by the setpoint (SET) plus an offset (doF). The compressor cut-out temperature is determined by the cut-in minus the differential (DIF).

Default settings of offset (doF) and differential (DIF) are in the second level menu (L2):

Setpoint	–18 F/–27.8 C
Offset	4 F/2.2 C
Differential	8 F/4.4 C
Cut In (calculated)	–14 F/–25.6 C
Cut Out (calculated)	–22 F/–30 C

Controller Security

The controller can be locked so that the set-points in the controller cannot be changed.

1. To lock, press **UP** and **DOWN** arrows simultaneously until **LOC** appears (approximately 5 s).
2. To unlock the controller, press up and down arrows simultaneously until **UNL** appears. Changes are only accepted when the controller is unlocked.

Changing Temperature Display from C to F

1. Press **SET** and **UP** arrow simultaneously until **L1** (first level menu) is displayed.
2. Press the **UP** arrow until **UNT** is displayed. Press **SET** then use the **UP** and **DOWN** arrows to change the temperature display from F to C. Press **SET** to accept. The display will return to the temperature in approximately 10 s.

Changing Temperature Display from Decimal to Integer

1. Press **SET** and **UP** arrow simultaneously until **L1** (first level menu) is displayed. Release.
1. Press **SET** and **UP** arrow simultaneously until **L2** (second level menu) is displayed.
2. Press the **UP** arrow until **rES** is displayed. Press **SET** then use the **UP** and **DOWN** arrows to select **Int** (integer) instead of **Dec** (decimal). Press **SET** to accept.

Sleep Function

Press the **SLEEP** button to blank the display, or press any button to wake the display. If the unit goes into an alarm, the display will wake to display the alarm.

Minimum and Maximum Temperature Function

Records the highest and lowest temperatures logged by the probe selected to be displayed. Default display probe is P3 (product simulation bottle probe).

High and low log display

1. Press the **UP** arrow to display the highest temperature the freezer has recorded since last reset or power cycle.
2. Press the **DOWN** arrow to display the lowest temperature that the freezer has recorded since last reset or power cycle.

Reset high and low log

1. Press **UP** or **DOWN** arrow until recorded temperature is displayed.
2. Press and hold **SET** until **RST** is displayed.

Alarming Functions

Set high and low alarms

1. Press and hold **SET** and **UP** arrows simultaneously until **L1** is displayed. Use the **UP** and **DOWN** arrows to navigate parameters.
2. The **low** temperature alarm parameter is **AIL**. Once the parameter is displayed, press **SET** to display the low alarm temperature. The alarm temperature will flash on the display. Use the **UP** and **DOWN** arrows to set the alarm temperature. Press **SET** to accept.
3. The **high** temperature alarm parameter is **AIH**. Once the parameter is displayed, press **SET** to display the high alarm temperature. The alarm temperature will flash on the display. Use the **UP** and **DOWN** arrows to set the alarm temperature. Press **SET** to accept.

Start-up alarm Delay

The unit has a 120 minute time delay between when the unit is energized to when the temperature alarms become active. This delay can be change in parameters in the controller under **Alarm Startup Delay (ASd)**.

Mute the Alarms

The mute button is used to temporarily mute the audible alarm for 10 minutes. If the alarm condition of the unit has not changed in 10 minutes, then the alarm will sound again.

Alarm acknowledgement and Alarm Reset

The alarm will need to be acknowledged after the alarm condition has been resolved, before the alarm will reset. To acknowledge the alarm press and hold set until the RST is displayed.

Probe calibration

The temperature probes can be calibrated from **–9.9 to +9.9**. The calibration is in the second level menu under **P1C** (control probe) **P2C** (defrost) **P3C** (Alarm).

Alarm Codes

When the unit senses an alarm, the display will flash the following codes.

Value	Description
HA1	Temperature is above the High Alarm #1 set point.
LA1	Temperature is below the low Alarm #1 set point.
HA2	Temperature is above the High Alarm #2 set point.
LA2	Temperature is below the Low Alarm #2 set point.
DFA	Defrost time out (lasted the full 30 minutes)
Lob	Low battery alarm.
dA	Door open alarm.

Error Codes

Value	Description
P1-P3	Controller is not sensing the probe.
F9	Error saving new parameter values to permanent storage.
F10	Incomplete model configuration.
F11	Number/membrane is sticking.
F21	Key shorted on user interface.
F22	Communication error with user interface.
F23	Communication error with Machine Control.

Alarming Contacts – *Optional Accessory*

This unit can be equipped with dry contacts that may be connected to a 3rd party monitoring system. The dry contacts would have a Common, a Normally Open and a Normally Closed connection point. By default, Alarm Relay 1 is set to activate with any of the following alarms: Alarm 1 High temp, Alarm 1 Low temp, Door Open Alarm, and Power Loss Alarm.

Fig. 21 - Rear Panel Connections (when installed)

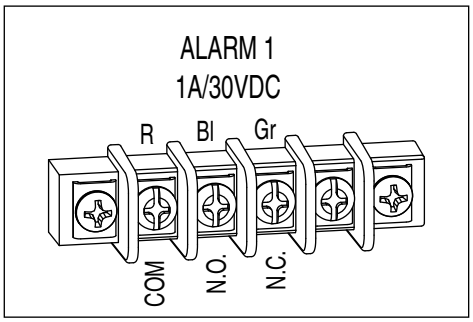

Advanced Settings

The freezer can be further customized through the first level (L1) and second level parameters (L2) in the chart below.

1. Press and hold **SET** and **UP** arrows simultaneously until **L1** is displayed.
2. Use the **UP** and **DOWN** arrows to navigate the parameters. When the desired parameter is displayed, press **SET**.
3. Use the **UP** and **DOWN** arrows to navigate the sub menu of the parameter. Press **SET** to accept and the display will return to the parameter list (after 30 seconds the display will return to the temperature display).

Parameter	Display	Description
Beeper Function	bPr	Controls the audible beeper function on the controller. **Off**, **All**, **door**, **Alarm**, Error.
Beeper Volume	bPu	Sets the volume of the beeper: **0** (minimum) to **10** (maximum).
Button Clicks	btc	Sets if a beep should sound each time a button is pressed. **Yes** or **No**.
Sleep Function	SLP	Determines if sleep function activated from the panel. **Yes** or **No**.
Sleep Timer	SLt	Amount of time before the screen blanks automatically. **0** s to **600** s.
Alarm1 High Temp	A1H	High temperature to activate alarm1. User set point to 121 C (250 F).
Alarm1 Low Temp	A1L	Low temperature to activate alarm1. User set point to –46 C (–50 F).
Alarm1 Probe	A1P	Probe for Alarm. **P1** (cabinet air), **P2** (evaporator), **P3** (product simulation bottle - default).
Units	unt	Display temperatures in degrees C or F. **F** or **C**.

1. Press and hold **SET** and **UP** arrows simultaneously until **L1** is displayed.
2. Press and hold **SET** and **UP** arrows simultaneously again until **L2** is displayed.
3. Use the **UP** and **DOWN** arrows to navigate the parameters. When the desired parameter is displayed, press **SET**.
4. Use the **UP** and **DOWN** arrows to navigate the sub menu of the parameter. Press **SET** to accept and the display will return to the parameter list (after 30 seconds the display will return to the temperature display).

Parameter	Display	Description
Alarm1 Delay	A1d	Alarm1 delay before sounding. **0** to **60** minutes
Alarm1 Function	A1F	Defines the action taken when Alarm2 is activated. **NO** (normally open), **NC** (normally closed), **R1** (activate relay), **R2** (not used), **DIS** (disable).
Alarm1 Reset	A2r	Temperature difference to reset alarm1. **0** to **10** degrees.
Alarm2 Delay	A2d	Alarm1 delay before sounding. **0** to **60** minutes.
Alarm2 Function	A2F	Defines the action taken when Alarm2 is activated. **NO** (normally open), **NC** (normally closed), **R1** (activate relay), **R2** (not used), **DIS** (disable).
Alarm2 Reset	A2r	Temperature difference to reset alarm1. **0** to **10** degrees.
Alarm Ring back	Arb	Defines the time delay until the alarm will resound. **0** to **120** minutes
Alarm Startup Delay	ASd	Defines the alarm delay during startup. **0** to **180** minutes.
Alarm Silencing	ASL	Determines if the alarms can be silenced or not. **Yes**, **No**.
Maintain Alarm	nAL	Determines if the alarm (1-3) should be maintained if the temperatures fall back into range. **Yes**, **No**.
Probe 1 Calibration	P1C	Offset value for probe 1 calibration. **-9.9** to **9.9**.
Probe 2 Calibration	P2C	Offset value for probe 2 calibration. **-9.9** to **9.9**.
Probe 3 Calibration	P3C	Offset value for probe 3 calibration. **-9.9** to **9.9**.
Controller Parameter Reset	rSt	Reset to restore factory parameters.

Follett Keypad Lock

Default user passcode for first-time users

User Code 01 is factory set by default to **1 2 3 4 5 6**.

Note: In order to continue using 1 2 3 4 5 6 as a default, user-selectable programming codes must be stored in slots 02 to 40.

User Codes 02 to 40 do not have any codes set up and are available for user-programming.

Each time a button is pressed, a chirp will be heard.

To Change the Master Code

The master code is needed to add or change the individual user codes. By default, the master code is set to **1 2 3 4 5 6**.

The master code is stored in User ID # 99.

1. Press **3 6 5**, the *****, followed by the current Master Code, followed by **ENTER** (5 Chirps will be heard).
2. Press **9 9**, followed by **ENTER**. (3 chirps will be heard).
3. Enter the new master code, followed by **ENTER** (3 chirps will be heard).
4. Re-enter the new master code, followed by **ENTER**. (5 chirps will be heard).
   – Pressing [**CANCEL**] at any point will cancel the routine.

To Enter or Change a User Code

1. Press **3 6 5**, the *****, followed by the Master Code, followed by **ENTER**. 5 Chirps will be heard.
2. Enter the user ID (a two digit code from 00 to 40), followed by **ENTER**. 3 chirps will be heard.
3. Enter the new user code (4 to 6 numbers), followed by **ENTER**. 3 chirps will be heard.
4. Re-Enter the new User Code, Followed by **ENTER**. 5 chirps will be heard to acknowledge that a new code was entered.

Example: To enter a new user code of 4 4 3 3 5 5 for ID # 15

1. Press **3 6 5 * 1 2 3 4 5 6** [**ENTER**] (5 chirps will be heard).
2. Press **1 5** [**ENTER**] (3 chirps will be heard).
3. Press **4 4 3 3 5 5** [**ENTER**] (3 chirps will be heard).
4. Press **4 4 3 3 5 5** [**ENTER**] (5 chirps will be heard).

The new code has been entered for the ID.

To Delete a User Code

1. Press **3 6 5**, the *****, followed by the Master Code, followed by **ENTER**. 5 Chirps will be heard.
2. Enter the user ID to clear, followed by **ENTER** (3 chirps will be heard).
3. Press **3 3 5**, **#** (3 chirps are heard) (335 = DEL).
4. Enter the user ID to clear, followed by **ENTER** (2 chirps will be heard).
5. Press **3 3 5**, **#** (5 chirps are heard).

The code assigned to that user ID has been deleted. If an error is encountered, the control will beep continuously for 3 seconds. The Master Code stored in user ID 99 cannot be deleted.

Example: To delete the user code in ID 15:

1. Press **3 6 5 # 1 2 3 4 5 6** [**ENTER**] (5 chirps will be heard).
2. Press **1 5** [**ENTER**] (3 Chirps will be heard).
3. Press **3 3 5, #** (3 Chirps will be heard) (335 = DEL).
4. Press **1 5** [**ENTER**] (2 Chirps will be heard).
5. Press **3 3 5, #** (5 Chirps will be heard).

Door Gasket Replacement

1. Remove existing gasket from mounting track **(Fig. 22)**.
2. Verify mounting track is free of any remaining gasket material.
3. Align new gasket with mounting track and press firmly in place.
4. Open and close door, checking for proper gasket seal without pinching against freezer.

Fig. 22

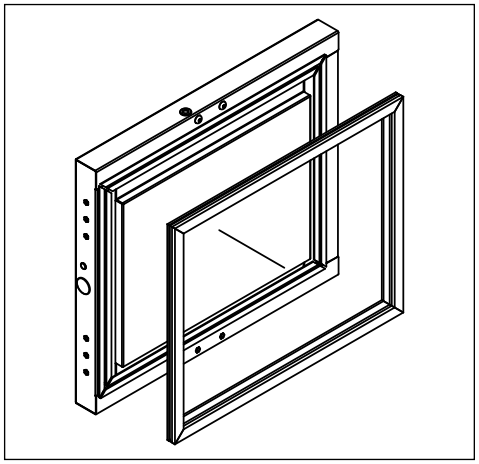

Access Compressor Compartment

Follett's compressor compartment allows technicians to gain full access to the condensing unit from the freezer back without cutting refrigerant lines.

1. Remove rear panel **(Fig. 23)**.
2. Remove two screws facing downward that secure the panel assembly to the base plate.
3. Loosen the six screws that secure the rear panel to the back of the refrigeration box. Lift rear panel off to access **(Fig. 24)**.

Fig. 23

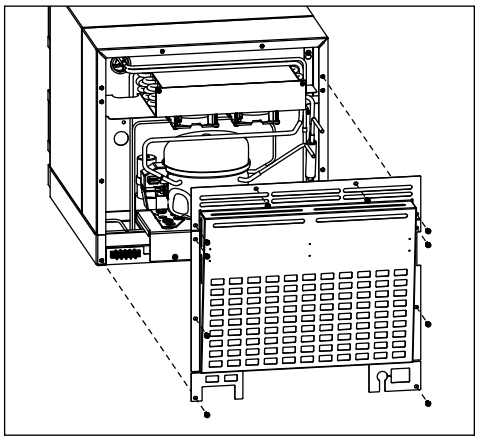

Fig. 24

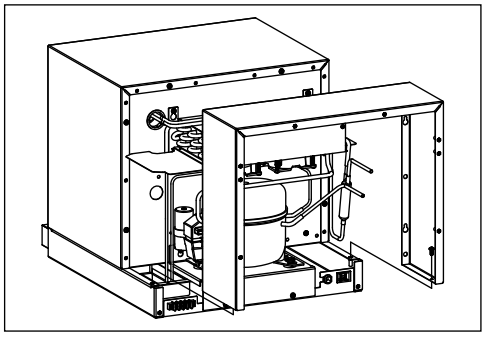

Changing the Back-up Batteries

1. Follow the instructions in the *Battery Backup* section on page 6.
2. After Step 7, disconnect the battery connector (with black and red wires) from the top of the battery pack.
3. Remove the eight AA batteries from the battery pack.
4. Install eight new AA batteries into the battery pack.
5. Continue with Step 8 of the *Battery Backup* section.

Controller Replacement

1. Turn power switch to the OFF position and unplug the unit from the power supply.
2. Remove the two screws **(Fig. 25)** on the front panel at the bottom of the unit.
3. Remove the front panel and slide the panel to the right of the freezer.

Note: Take care when removing, some wires may be connected to the front panel.

Fig. 25

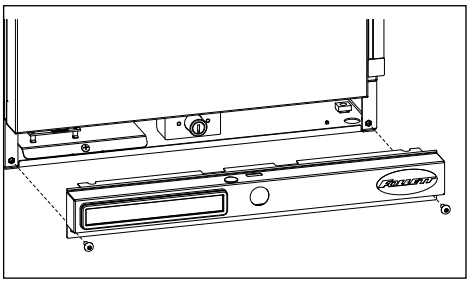

4. Find the control module and remove the screw at the front of the module **(Fig. 26)**.
5. Lift the module and pull forward.

Fig. 26

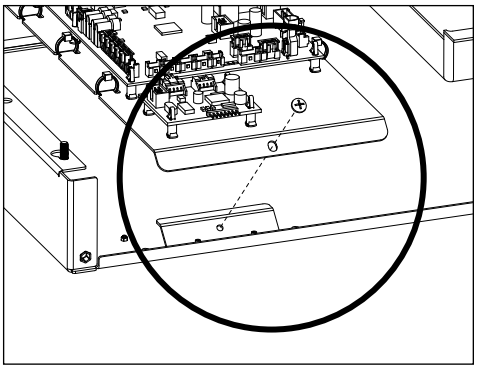

Refrigeration System

The refrigeration system is designed to give many years of trouble-free service. Except for routine cleaning of the air-cooled condenser and related parts, the refrigeration system requires no service or maintenance. The system uses a TXV and is critically charged.

Checking Refrigeration System Pressures

CAUTION!

Please contact Follett Technical Service at (877) 612-5086 or (610) 252-7301 in the event of a refrigeration problem that requires evacuation and recharging.

FZR1, FZR2

	FZR1		FZR2	
Condenser inlet air temperature	**70 F (21.1 C)**	**80 F (26.6 C)**	**70 F (21.1 C)**	**80 F (26.6 C)**
Suction pressure (psig)	11.1	11.6	11.6	11.8
Discharge pressure (psig)	232	271	207	230

Note: Do not attempt to obtain correct refrigeration pressures by adjusting the system charge.

Refrigeration System Diagram

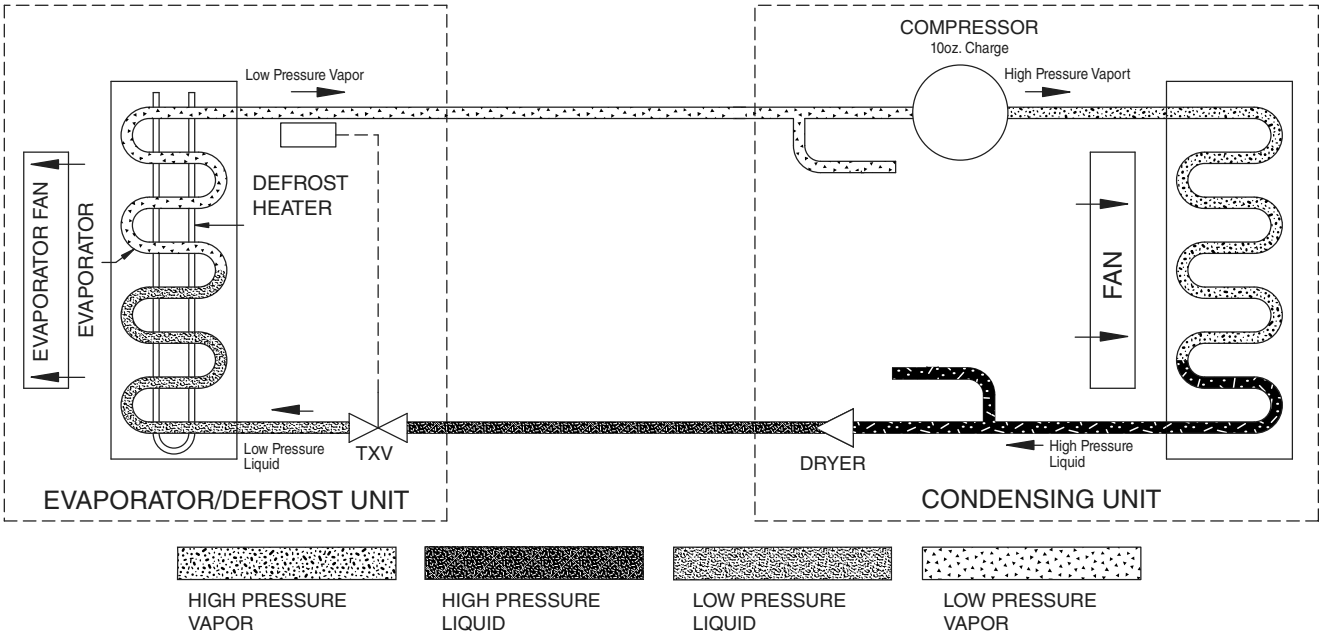

Compressor Information

Danfoss model	TFS4.5CLX
Run load amps (RLA)	3.5
Lock rotor amps (LRA)	20
Ohms start winding to common	3.8
Ohms run winding to common	2.6
Ohms start winding to run winding	6.4

Defrost Heater Information

- 4.0A, 456 W @ 70 F, 115V
- Resistance:
  70 F (21 C) = 27.6 Ω to 30.5 Ω

Wiring Diagram

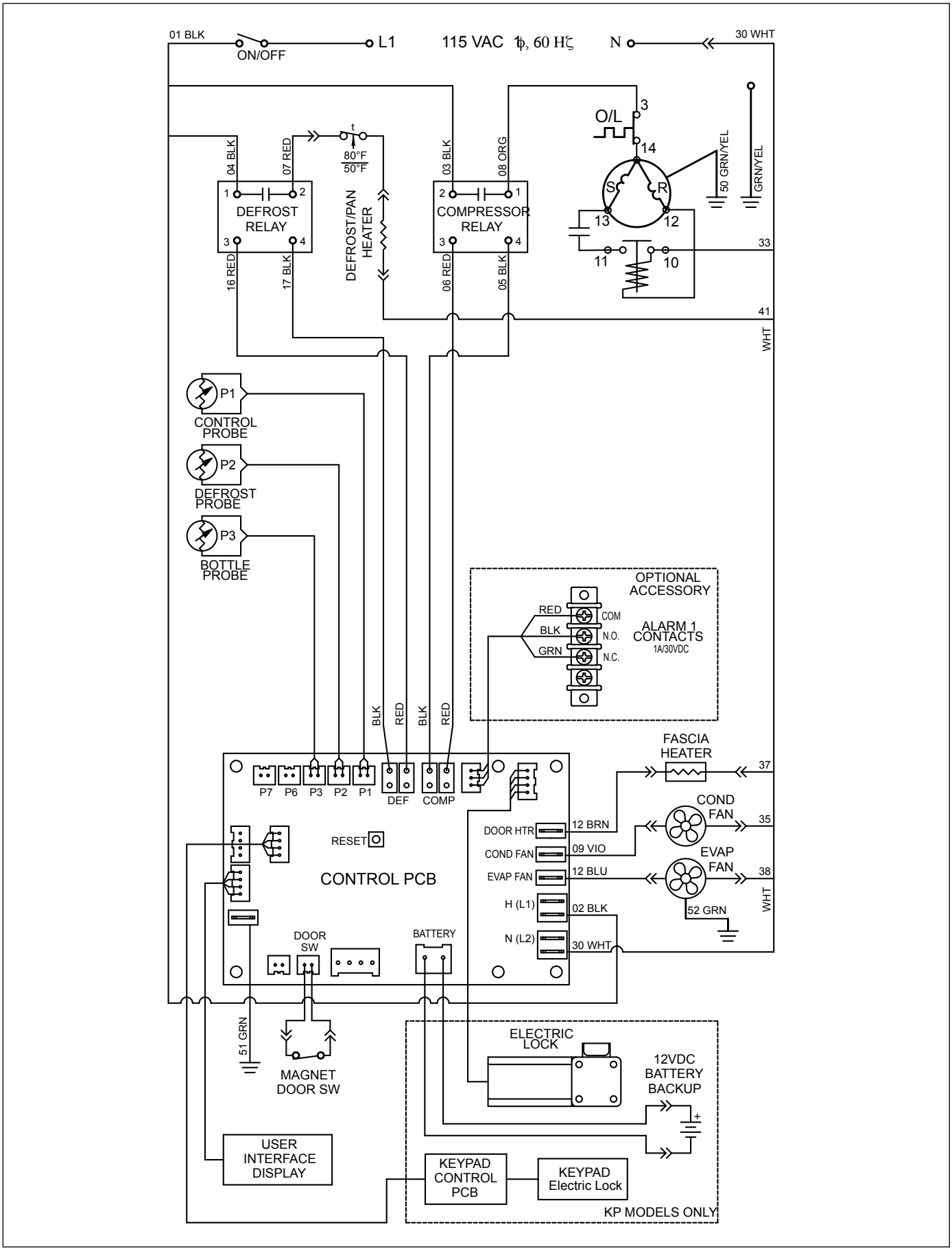

Freezer Troubleshooting

Before calling for service

1. Check that unit is plugged in.
2. Test outlet with another appliance to verify power.

Troubleshooting Matrix

Sympton	Possible Cause	Solution
Freezer does not operate (no components run).	Power switch faulty or in OFF position; loose connection.	Turn power switch to ON; check switch and connections.
	Freezer not plugged in.	Connect plug.
	No power to cord.	Restore power.
	Temp controller not energizing components.	Check controller contact terminals for power. Replace controller if needed.
	Probe not sensing set point temperature.	Replace controller and/or probe.
Compressor does not run.	Thermal overload open or defective.	Allow to cool or replace.
	Capacitor and/or relay defective.	Replace as required.
	Compressor defective.	Replace compressor.
Evaporator fan motor does not run.	Defective fan motor.	Replace fan motor.
Freezer does not shut off.	Controller not sensing cut-off temperature.	Replace controller and/or probe.
	Controller keeping refrigeration system energized.	Replace controller.
Freezer does not maintain temperature (all components run).	Condenser or evaporator coil needs cleaning.	Clean coils.
	Faulty door gasket.	Replace door gasket.
	Excessively high ambient or indadequate air clearance.	Maximum recommended ambient is 100 F (38 C). See *Locating the Freezer on page 4*.
	Refrigerant leak.	Locate and repair leak.
	Incorrect refrigerant charge.	Recover, evaluate and weigh in correct charge.
	Plugged TXV.	Replace TXV and filter drier.
	Inefficient compressor.	Consult technical services.

If problems persist after following this basic troubleshooting guide, call Follett technical service group at (877) 612-5086 or +1 (610) 252-7301.

Accessories

The following accessories are available for Performance Plus undercounter freezers. Instruction sheets are available in the download section of the Follett website (www.follettice.com).

Temperature Surveillance Module Accessory (P/N 00168674)

- Reference instruction 00168609 (packed with module)

Temperature Alarm Accessory (P/N 00112185)

- Reference instruction 00112052 (packed with temperature alarm accessory)

Glycerine - 16 oz. bottle (P/N 00959296)

Wall-mount Kit (P/N 00969949)

- Reference instruction 00969642

Remote Alarm Contact Accessory (P/N 01092022)

Stacking Kit Countertop to Countertop (P/N 01100742)

- Reference instruction 01102185

  Note: new kickplates may need to be ordered, please contact Follett for more information.

Stacking Kit Countertop to Performance Plus (includes one straight kick plate) (P/N 01100759)

- Reference instruction 01103084

Caster Kit (P/N 01111947)

- Reference instruction 01334457

2" Pedestal Kit (P/N 01154845)

- Reference instruction 01334457

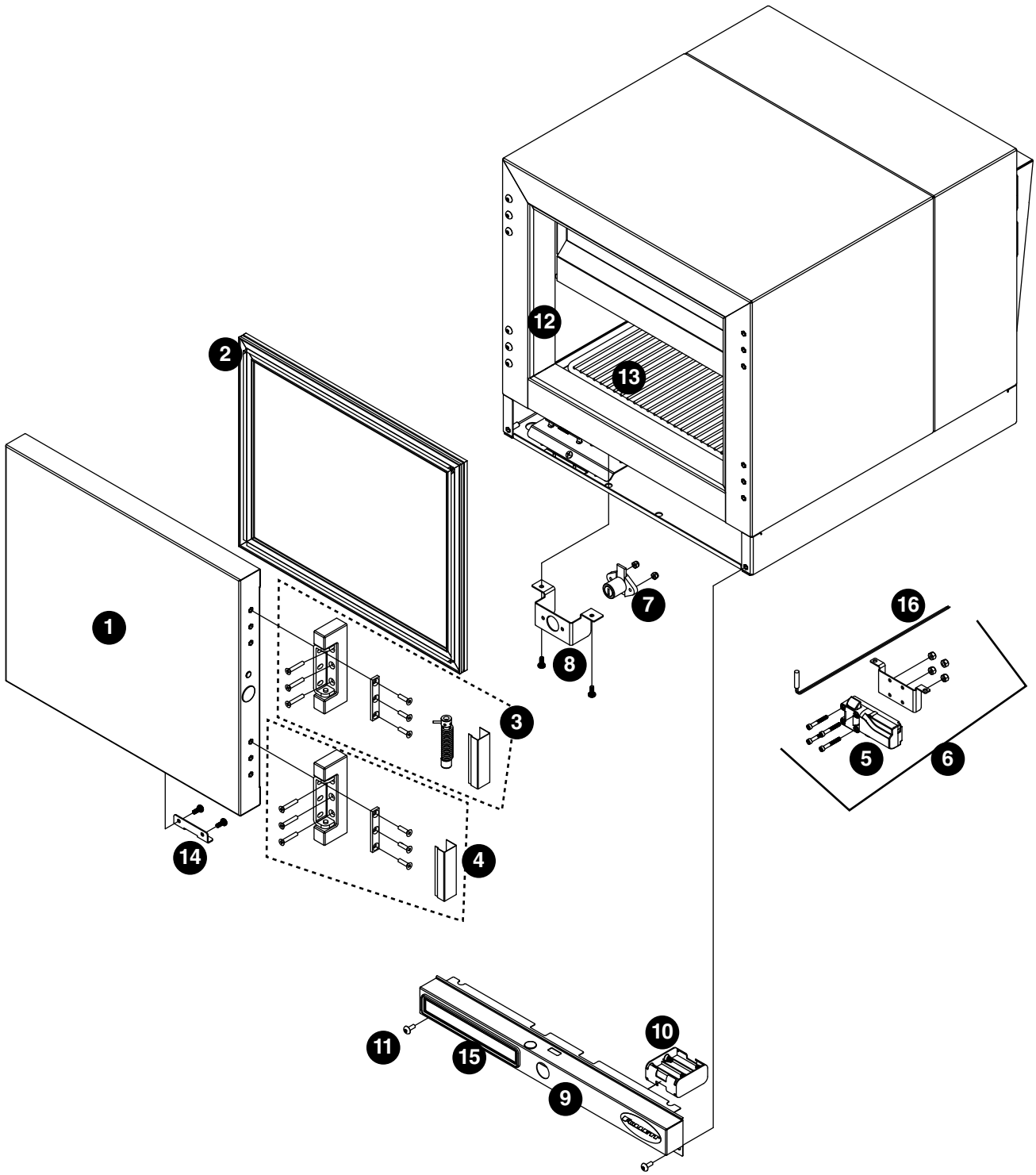
1
2
3
4
5
6
7
8
9
10
11
12
13
14
15
16

Hardware

Reference #	Description	Part #
1	Door with gasket and lock strike bracket, FZR1	01081710
1	Door with gasket and lock strike bracket, FZR2	01081728
2	Gasket, door, FZR1	01077437
2	Gasket, door, FZR1 (After Serial K26457)	01182740
2	Gasket, door, FZR2	01077445
2	Gasket, door, FZR2 (After Serial K26457)	01182757
3	Hinge, top with spring and hardware	01053677
4	Hinge, bottom	00940478
Not shown	Hinge kit, top and bottom with hardware	01053685
5	Spring bolt lock	01065507
6	Spring bolt with latch, bracket, and hardware	01081702
7	Lock, deadbolt with keys	00959528
8	Bracket, lock mounting	01095843
9	Panel, front	01081660
Not shown	Panel, front with keypad	01081678
10	Battery pack (includes harness)	01085018
Not shown	Foot pads	00900134
11	Screws, front panel (2 required)	203460
12	Strip sealer, REF1/2, /FZR1/2	01081736
Not shown	Fascia heater, FZR1	01064641
Not shown	Fascia heater, FZR2	01064666
13	Shelf	00969956
14	Bracket, lock strike	01041953
15	Display, controller	01085794
Not shown	Bracket, bottle	00961656
Not shown	Bottle, solution, 60 mL	00112037
Not shown	Gasket, bottle	0012029
16	Reed switch	01092048
Not shown	Pilaster, screw, FZR2 only	206796
Not shown	Pilaster, FZR2 only	00961334
Not shown	Support, shelf	00156240

Evaporator

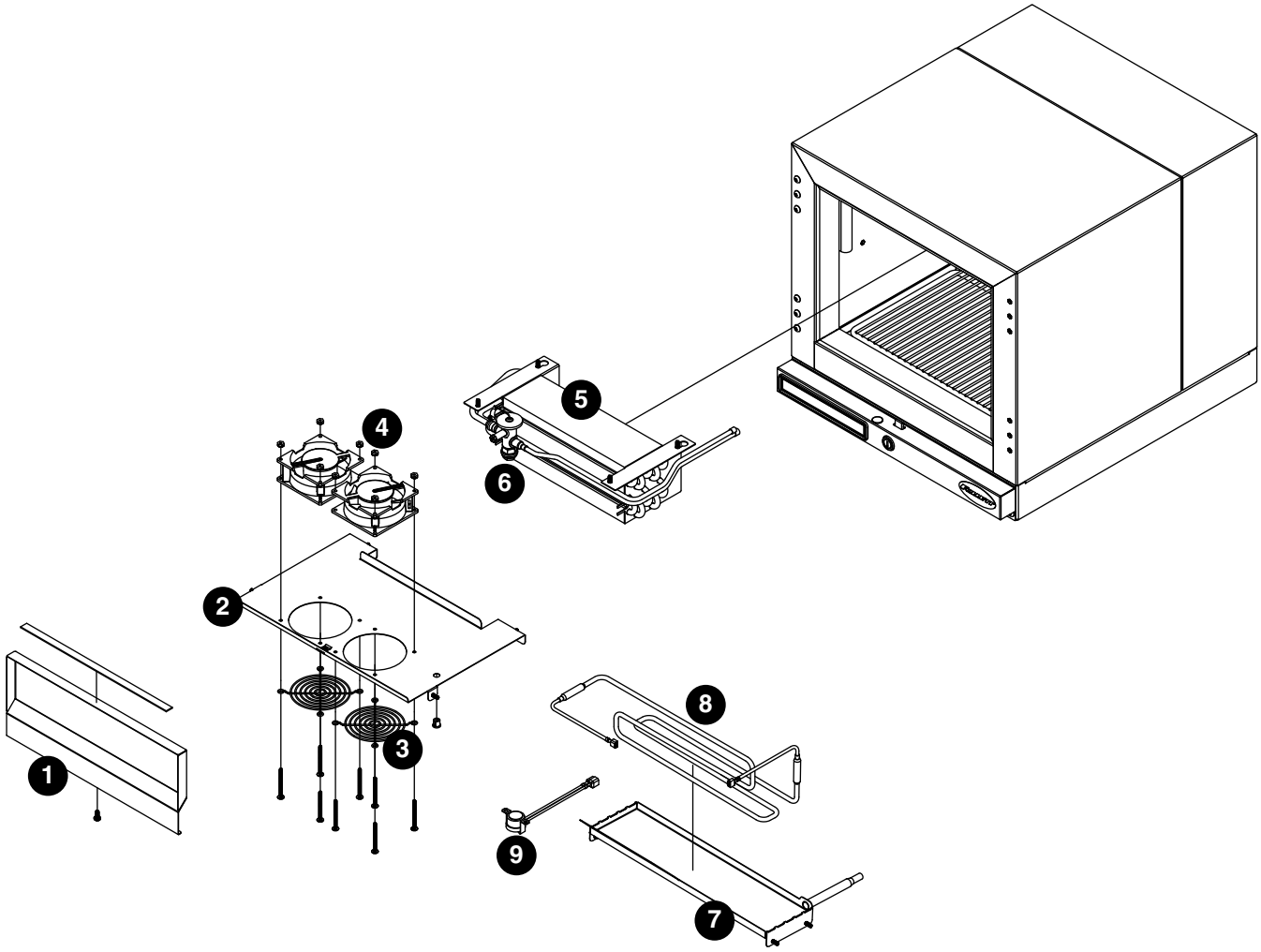

Reference #	Description	Part #
1	Cover, evaporator, front	01081751
2	Cover, evaporator	01085000
3	Fan guard, evaporator	00940452
4	Fan, evaporator	00940460
5	Evaporator	01017961
6	Thermal expansion valve	01081785
7	Drain pan assembly, evaporator, FZR1/2	01086917
8	Defrost heater, FZR1/2	01063940
9	Safety switch, defrost, FZR1/2	00153932
Not shown	Wire, heater, evaporator drain pan	01163401
Not shown	Kit, heater wire, defrost	01175553

Compressor Components

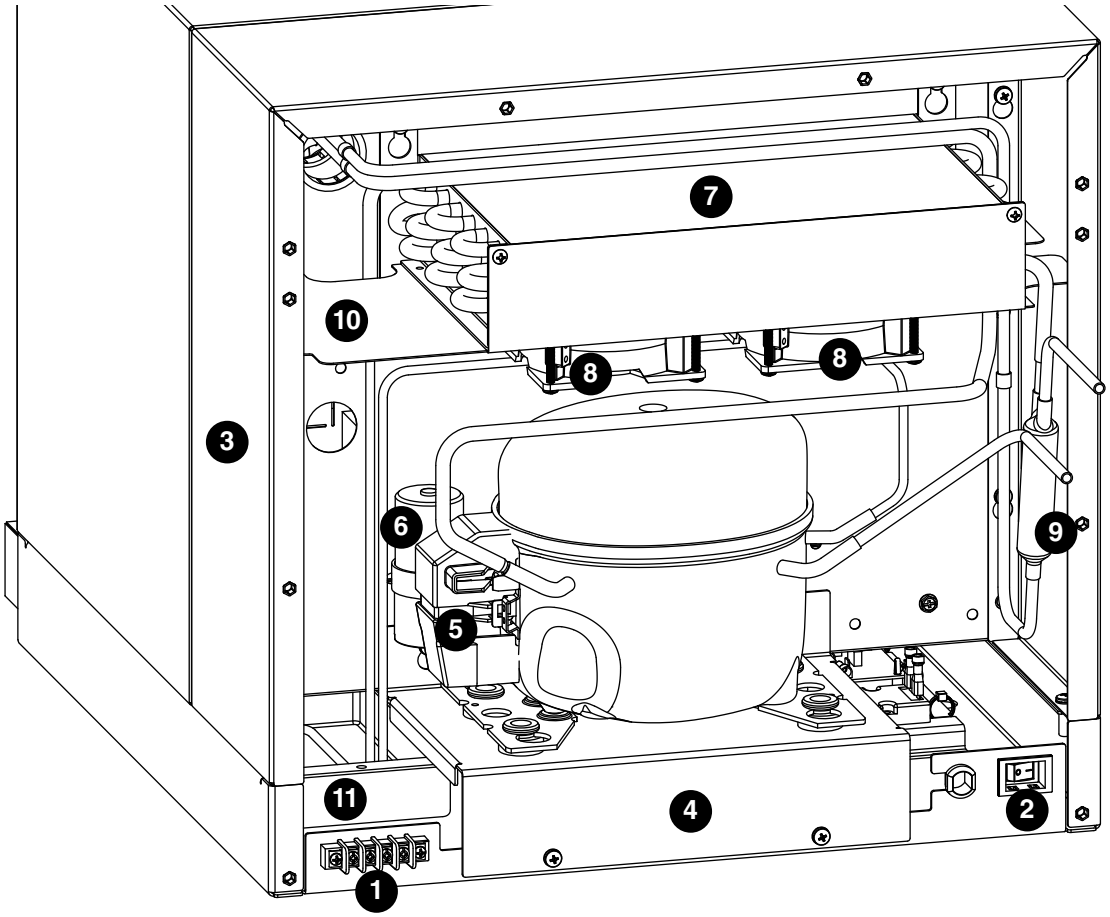

Reference	Description	Part #
1	Alarm terminal (part of Alarm Contact Accessory)	01017516
2	Swtich, power	00967604
3	Refrigeration cover, FZR1	00960799
3	Refrigeration cover, FZR2	00960807
4	Compressor support bracket	00958694
5	Start relay, compressor	01074723
6	Start capacitor, compressor	01062348
7	Coil, condenser	01041565
8	Motor, fan, condenser	00940460
9	Drier, filter	01068857
10	Fan shroud, condenser, FZR1	01041979
10	Fan shroud, condenser, FZR2	01065093
Not shown	Lower ventilation cover, FZR1/2	01037803
Not shown	Upper ventilation cover, FZR1	01062892
Not shown	Upper ventilation cover, FZR2	01037811
11	Condensate tray	00902601
Not shown	Compressor with start components and drier	01096023
Not shown	Relay cover	01074731

Control Board

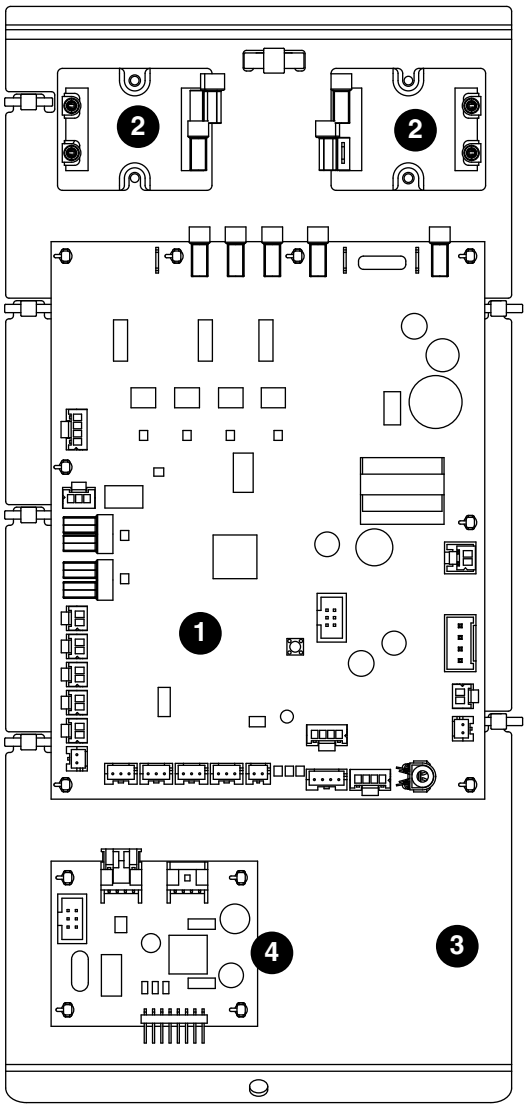

Reference	Description	Part #
1	Control board, FZR1/2	01081793
Not shown	Control board, keypad, FZR1/2 - KP models	01081801
2	Compressor/defrost relay	01042092
Not shown	Probe, temperature	01062801
3	Mounting plate, control board	01097955
Not shown	Stand offs, control board	00903005
Not shown	Mounting plate screw	204511
4	Drive board - keypad	01085844
Not shown	Probe jumper	01092014

Warranty Registration and Equipment Evaluation

Thank you for purchasing Follett® equipment. We hope you find that our equipment meets or exceeds your expectations, as our goal is to deliver high value products and services that earn your complete satisfaction!

Please review the enclosed installation and operations manual. It is important that the installation be performed to factory specifications, so your equipment operates to its maximum efficiency.

Follett LLC will not be liable for any consequential damages, expenses, connecting or disconnecting charges or any losses resulting from a defect of the machine.

For full warranty details, visit our website www.follettice.com/productwarranties.

Warranty registration and equipment evaluation is important to help us keep track of our equipment and to record the machine's performance. We request that you register Follett equipment warranties on our website www.follettice.com/support and choose Warranty Registration and Equipment Evaluation. It's simple to do; please take a moment to register today. There is also space on the form to provide us with comments and feedback. Please let us know about your experience so we can capture it for our continuous improvement efforts.

We pride ourselves on producing outstanding equipment and we work hard to back it up with outstanding customer and technical support. Please let us know what else we can do to assist you. We would be happy to answer your questions.

Registro de Garantía y Evaluación del Equipo

Gracias por haber elegido este producto Follett®. Esperamos que nuestro equipo cumpla o supere sus expectativas porque es nuestro objetivo ofrecer productos y servicios de gran valor que se ganen su plena confianza.

Le rogamos consulte el manual de instalación y de instrucciones adjunto, ya que es muy importante que la instalación se realice según las especificaciones de fábrica para que el equipo funcione a su máxima eficiencia.

Follett LLC no se hace responsable de los daños indirectos, costos, gastos por conexión y desconexión o pérdidas por causa de defecto de la máquina.

Si desea una información más completa sobre la garantía, visite nuestro sitio web www.follettice.com/productwarranties.

Las operaciones de registro de la garantía y evaluación del equipo son importantes para que podamos realizar un seguimiento de nuestro equipo y registrar el rendimiento de la maquinaria. Por favor, registre las garantías del equipo Follett en nuestro sitio web www.follettice.com/support y seleccione Registro de la Garantía y Evaluación del Equipo. Es muy sencillo, solo le llevará un momento realizar hoy mismo el registro. En el formulario incluimos un espacio en blanco para sus comentarios y opiniones. Infórmenos sobre su experiencia para que podamos incorporarla a nuestros continuos esfuerzos de mejora.

Nos enorgullecemos de producir un equipo excepcional y trabajamos duro para respaldarlo con un soporte técnico y un servicio de atención al cliente de primera. Le rogamos nos indique qué más podemos hacer para ayudarle. Estaremos encantados de responder a sus dudas.

Enregistrement de la garantie et évaluation de l'équipement

Merci d'avoir acheté un équipement Follett®. Notre objectif étant d'offrir des produits et des services de grande valeur vous satisfaisant pleinement, nous espérons que celui-ci satisfera, voire dépassera, vos attentes !

Veuillez consulter le manuel d'installation et d'exploitation. Il est important que l'installation soit réalisée conformément aux spécifications de l'usine, de sorte que votre équipement fonctionne à son rendement maximum.

Follett LLC n'est pas responsable de tout dommage consécutif, de toute dépense, de tout frais de raccordement ou de déconnexion, ni de toute perte liée à un défaut de la machine.

Pour lire la garantie dans son ensemble, visitez notre site Internet www.follettice.com/productwarranties.

L'enregistrement de la garantie et l'évaluation de l'équipement sont importants pour nous aider à suivre notre équipement et pour enregistrer les performances de la machine. Nous vous demandons donc d'enregistrer la garantie de votre équipement Follett sur notre site Internet, www.follettice.com/support, dans la section Warranty Registration and Equipment Evaluation. Cette opération est simple ; veuillez prendre un moment pour la réaliser aujourd'hui.

Le formulaire contient également un espace pour nous faire parvenir vos commentaires et un retour d'informations. Veuillez nous faire part de votre expérience pour que nous puissions prendre appui dessus pour poursuivre nos efforts constants d'amélioration.

Nous sommes fiers de produire des équipements exceptionnels et nous travaillons avec acharnement pour y associer une assistance à la clientèle et technique exceptionnelle. N'hésitez pas à nous indiquer dans quelle mesure nous pouvons vous aider. Nous serions ravis de répondre à vos questions.

Follett is a registered trademark of Follett Products LLC, registered in US.

801 Church Lane • Easton, PA 18040, USA
Toll free (877) 612-5086 • +1 (610) 252-7301
www.follettice.com

01069798R11
© Follett Products LLC 10/26