34.00" Deep slope front

ice storage bins



IB-033 shown



Shown with 22" wide modular ice machine (ordered separately)

Features

Capacities available from 265 - 816 lb (120 - 370 kg) and widths from 22.00" - 48.40" (55.9 - 122.9 cm)

Convenient design

- sloped front bin for easy ice access
- convenient grip handle
- 6.00" (15.24 cm) adjustable legs

Durable construction

- high-quality construction and components for reliable performance
- corrosion-resistant 304 stainless steel and ABS exterior
- high-density urethane insulation for long-lasting ice preservation

Easy installation

- comes assembled, simply screw in legs

Warranty

- 3 years parts and labor for corrosion repair for useful life of the product
- 3rd party ice machines must be installed and operated in accordance with the manufacturer's instructions
- visit follettice.com for complete warranty details

Accessories

Bin adapter for use with IM-0350-22, IM-0460-22, IM-0550-22, IM-0770 ice machines on IB-033 and IB-044 slope front bins, refer to form# 1168 (item# IBT-2230BV)

Bin adapter for use with IM-0350-22, IM-0460-22, IM-0550-22, IM-0770 ice machines on IB-085-48 slope front bin, refer to form# 1168 (item# IBT-2248B)

Bin adapter for use with IM-0350, IM-0460, IM-0550, IM-0750, IM-1100 ice machines on IB-085-48 slope front, refer to form# 1168 bin (item# IBT-3048B)

Additional bin accessories (refer to form# 4025)

801 Church Lane | Easton, PA 18040, USA
1.610.252.7301 | Fax: +1.610.250.0696 | follettice.com

FOLLETT®

Dimensional drawing

IB-026-22

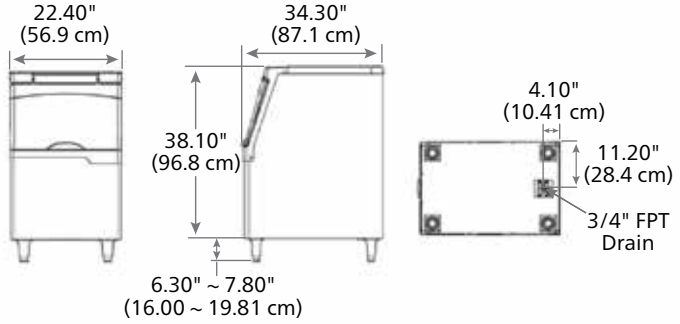

IB-033

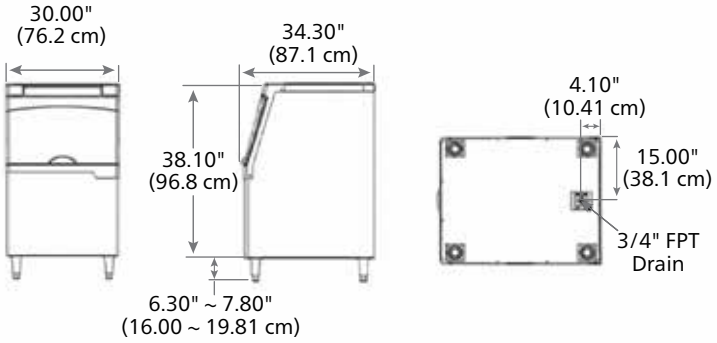

IB-044

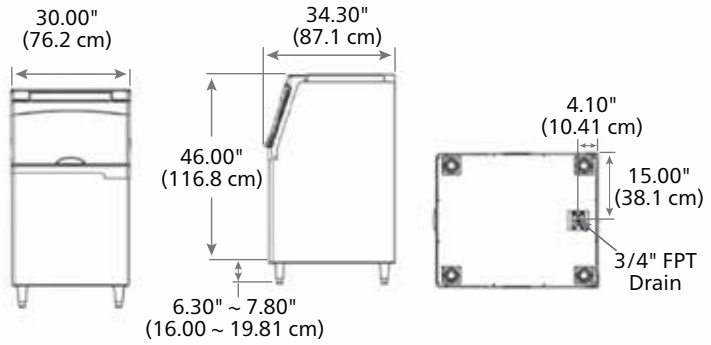

IB-085-48

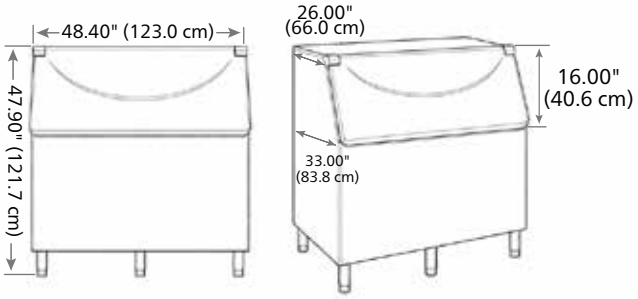

Specification

Maximum bin capacity[1]	IB-026-22: 265 lb (120 kg) IB-033: 350 lb (159 kg) IB-044: 440 lb (200 kg) IB-085-48: 816 lb (370 kg)
Required door access	IB-026-22: 22.00" (55.9 cm) IB-033: 30.00" (76.2 cm) IB-044: 30.00" (76.2 cm) IB-085-48: 30.00" (76.2 cm)
Drain[2]	3/4" FPT, rear bin bottom
Ice compatibility	Cube, half cube, nugget, flake
Approximate net weight	IB-026-22: 99.2 lb (50 kg) IB-033: 121 lb (55 kg) IB-044: 143 lb (65 kg) IB-085-48: 143 lb (65 kg)
Approximate ship weight	IB-026-22: 130 lb (59 kg) IB-033: 145 lb (66 kg) IB-044: 167 lb (76 kg) IB-085-48: 195 lb (88 kg)
NOTE: For indoor use only	

[1] Computed on cubic volume of bin. Does not reflect cart capacity or voids that can occur due to pyramiding.
[2] Follett recommends installation of a floor drain with grate with all ice storage bins.

SHORT FORM SPECIFICATION: Ice storage bin to be Follett® model _____. Bin to hold approximately _____ lb (_____ kg) of ice. Construction to feature high-quality components with a durable, corrosion-resistant exterior of 304 stainless steel and ABS. Bin to be insulated with high-density urethane foam for enhanced ice preservation. Bin to feature a sloped front design and ergonomic grip handle for convenient ice access. Bin to include drain connection. NSF listed.

FOLLETT is a registered trademark of Follett Products, LLC, registered in the US.
Follett reserves the right to change specifications at any time without obligation. Certifications may vary depending on country of origin.

1187-20261112 | © Follett Products, LLC

801 Church Lane | Easton, PA 18040, USA
1.610.252.7301 | Fax: +1.610.250.0696 | follettice.com