Maestro Plus™

D414 series Chewblet® RIDE® ice machines

Model configurations					
Ice type	For use with[1]	Condenser	Refrigerant	V/Hz/Ph	**Item number**
Chewblet	countertop ice and beverage dispenser (by others), Follett® Vision™ dispensers and ice storage bins	air-cooled	R290	115/60/1	**D414AS**

[1] Ordered separately

Installation kits (required)[1] – Includes 20' (3 m) of ice transport tube	
Description	**Item number**
Installation kit for filling ice storage bins and countertop ice and beverage dispensers	**01558824**
Installation kit for filling Vision™ dispensers	**01558840**

[1] Certifications do not apply to installation kits.

Features

Maestro Plus ice machine with up to 425 lb (193 kg) daily production of consumer-preferred Chewblet ice

- automatically transport ice through a tube with RIDE technology from up to 20' (6 m) away
- water and energy efficient
- no noisy harvest cycles means quiet ice production

Consumer-preferred Chewblet ice

- preferred 2:1 over cube ice
- easy to chew
- more reliable dispensing than nugget or pellet ice
- slow melting, maintains drink temperature and quality comparable to cubes
- higher displacement than cube ice

Key Maestro Plus design features

- durable construction, versatile design – sturdy stainless steel exterior frame
- stainless steel evaporator, auger and top bearing
- oversized, heavy duty, tapered roller bearings ensure long, low-maintenance life
- automatic self-flushing of ice machine removes impurities
- compact design offers in-cabinet/undercounter, floor stand, wall bracket, on-fountain dispenser, or on-bin mounting

Maintenance and service benefits

- cleaning and sanitizing of entire machine takes less than 1 hour
- LED control board provides at-a-glance machine status

Warranty

- 3 years parts and labor, 5 years compressor parts[1]

Certifications (applied to all products unless otherwise noted)

NSF | UL CERTIFIED SAFETY US CA SA4865 | c UL | Energy Verified | Energy ENERGY STAR

Options and accessories[2]

- ☐ Wall mount bracket (see form# 3311)
- ☐ Slide-out track accessory – allows RIDE model ice machines to slide-out without disconnecting utilities (see form# 3311)
- ☐ Ice machine stand, height-adjustable (see form# 3311)
- ☐ Water filters (refer to form# 1058)
- ☐ SafeCLEAN Plus™ ice machine cleaner (refer to form# 8295)
- ☐ Nu-Calgon IMS-III sanitizer (US only), 16 oz (0.5 L) bottle (item# 00979674)
- ☐ For additional accessories (refer to form# 4025 or 2155)

[1] Refer to form# 4025 or 2155 for additional warranty information.
[2] Certifications do not apply to options and accessories.

801 Church Lane | Easton, PA 18040, USA
1.800.523.9361 | 1.610.252.7301 | follettice.com

FOLLETT®

Dimensional drawing

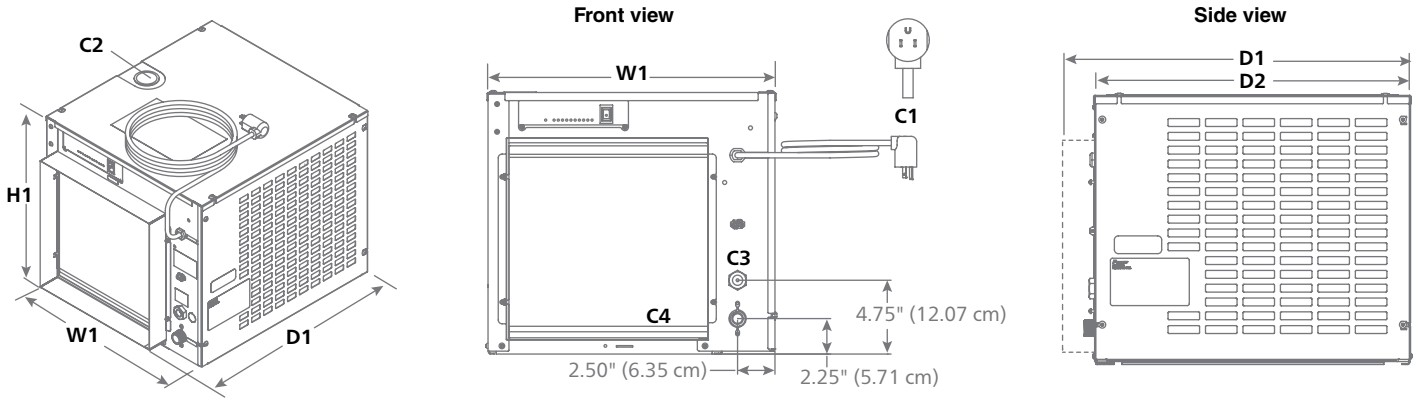

Specification

W1 Width	18.80" (47.8 cm)
D1 Depth	22.09" (56.1 cm)
H1 Height	17.10" (43.4 cm)
Service clearance	12.00" (30.5 cm) top – no front obstructions
C1 Electrical 115 V/60/1	7.2 amps, requires dedicated 15 amp circuit, 7' (2 m) cord, NEMA 5-15 plug
C2 Ice transport tube	see page 7 for details
C3 Water inlet	3/8" FPT
C4 Drain	3/4" MPT
Refrigerant	R290, 3.49 oz (99 g)
Air temperature	50 - 100 F (10 - 38 C)
Water temperature	45 - 90 F (10 - 32 C)
Potable water pressure	10 - 70 psi (69 - 483 kPa)
Condenser water pressure	10 - 125 psi (69 - 861 kPa)
Ice production at 70 F (21 C) air, 50 F (10 C) water	425 lb (193 kg)
Ice production at 90 F (32 C) air, 70 F (21 C) water	340 lb (154)
Energy consumption 90 F (32 C) air, 70 F (21 C) water	5.4 kWh per 100 lb (45.4 kg) ice
Heat rejection	5,000 BTU/hr (1260 Kcal/hr)
Water consumption	12.0 gal (45.4 L) of potable water per 100 lb (45.4 kg) of ice
Approximate net weight	150 lb (68 kg)
Approximate ship weight	160 lb (73 kg)
NOTE: For indoor use only	

SHORT FORM SPECIFICATION: Follett Maestro Plus ice machine model _____. Ice machine to be air-cooled and capable of producing compressed nugget ice using an efficient, sanitary vertical evaporator/auger system and delivering ice by a flexible wire reinforced transport tube to _____ ice storage bin, _____ countertop ice and beverage dispenser, _____ Vision dispenser or _____ drop-in dispenser and provided with a stainless steel frame, plus all the features listed and selected options and accessories. All models to use R290 refrigerant. NSF and UL listed.

1 – Locating the ice machine

Maestro Plus self-contained Chewblet ice machines with RIDE technology allow mounting in a base cabinet, on a wall or on a floor stand up to 20' (6 m) from the dispenser or ice bin. In-cabinet mounting requires special attention to service access, unit ventilation and ice tube runs.

RIDE model – countertop ice and beverage dispensers (by others)	**RIDE model – Follett low-profile Vision ice and beverage dispensers**	**RIDE model – Follett ice storage bins**
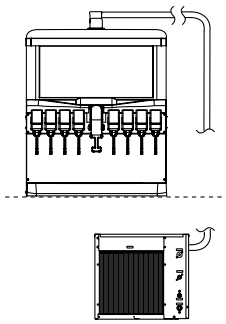	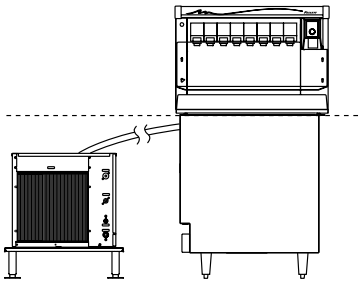	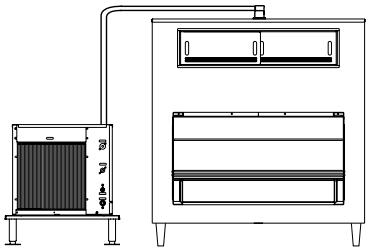
Important specifier notes	**Important specifier notes**	**Important specifier notes**
1. Dispenser must be compatible with nugget ice. Compatible dispensers include Cornelius DB/DF/ED, 150 BC, 175 BC, 200 BC, 250 BC, 300 BC, IDC215/255, FlavorFusion/Overload, Lancer 4500-22N, 4500-30N, FS16N, FS30N, FS44N, Servend MD150/175/200/250, MDH302/402, SV175/200/250 and Coca-Cola Freestyle. 2. Ice enters through the top of the ice and beverage dispenser. Contact factory for side entry. 3. Coca-Cola Freestyle 7000 requires top kit MSF30SC. Top adapter IC CODE 46412 and ice kit IC Code 46430 must also be ordered from Coca-Cola. Coca-Cola Freestyle 7100 requires top adapter IC Code 46751 and ice kit IC Code 46430 only, and must be ordered from Coca-Cola. Coca-Cola Freestyle 9100 requires top kit MSF26SC. Consult with Coca-Cola and Follett to qualify application prior to ordering. 4. RIDE application is approved only for Pepsi Spire 3.0, 5.0 and 4.1 designed for top mount ice machines and requires MSP24SC for 3.0 and MSP30SC for 5.0 and 4.1, ordered separately. For manual fill versions of Pepsi Spire 3.0, 5.0 and 4.1, contact factory.	1. See pages 4-6 for critical clearance and venting requirements.	1. See form# 8590 for bin sizing. Not for use with Ice•DevIce™ or Ice Pro™. 2. Locate floor sink or grate and drains in front of storage bin.

2 – Undercounter/in-cabinet mounting

Cabinet details	
Important specifier notes	
1. Cabinet door opening must meet minimum size requirements shown and be free of obstructions to allow ice machine to slide out (no lip or utilities to block removal). 2. Cabinet base must be capable of supporting ice machine and allow ice machine to rest flat on cabinet bottom. 3. No counter supports, electric or plumbing can run in front of the ice machine.	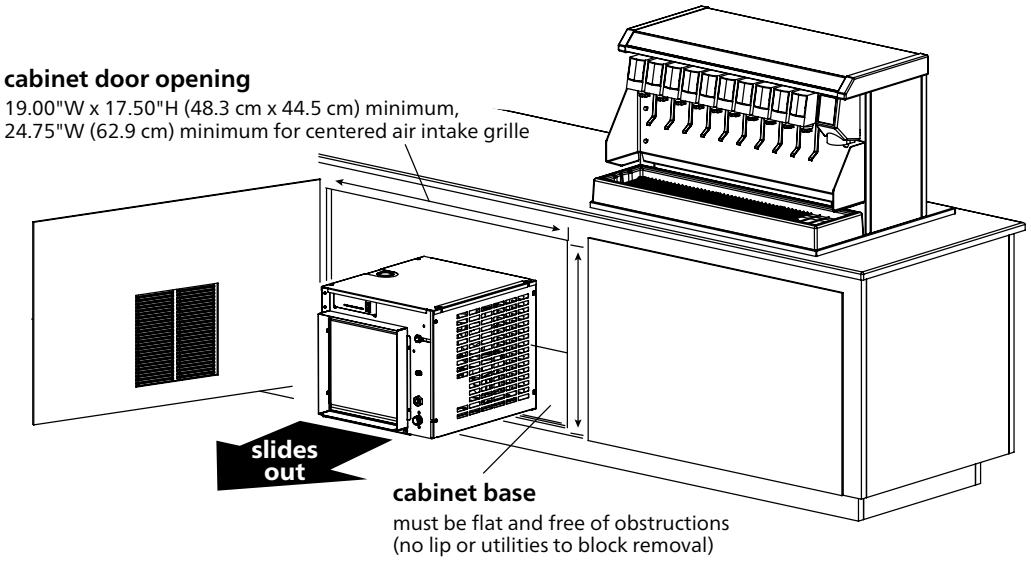

3 – Undercounter/in-cabinet mounting and ventilation

Using Follett supplied grilles

Maestro Plus ice machines can be installed undercounter/in-cabinet to fill bins or dispensers using RIDE technology. Care must be taken to ensure proper cabinet venting to avoid recirculation of hot air. Improper venting can cause ice machine outages.

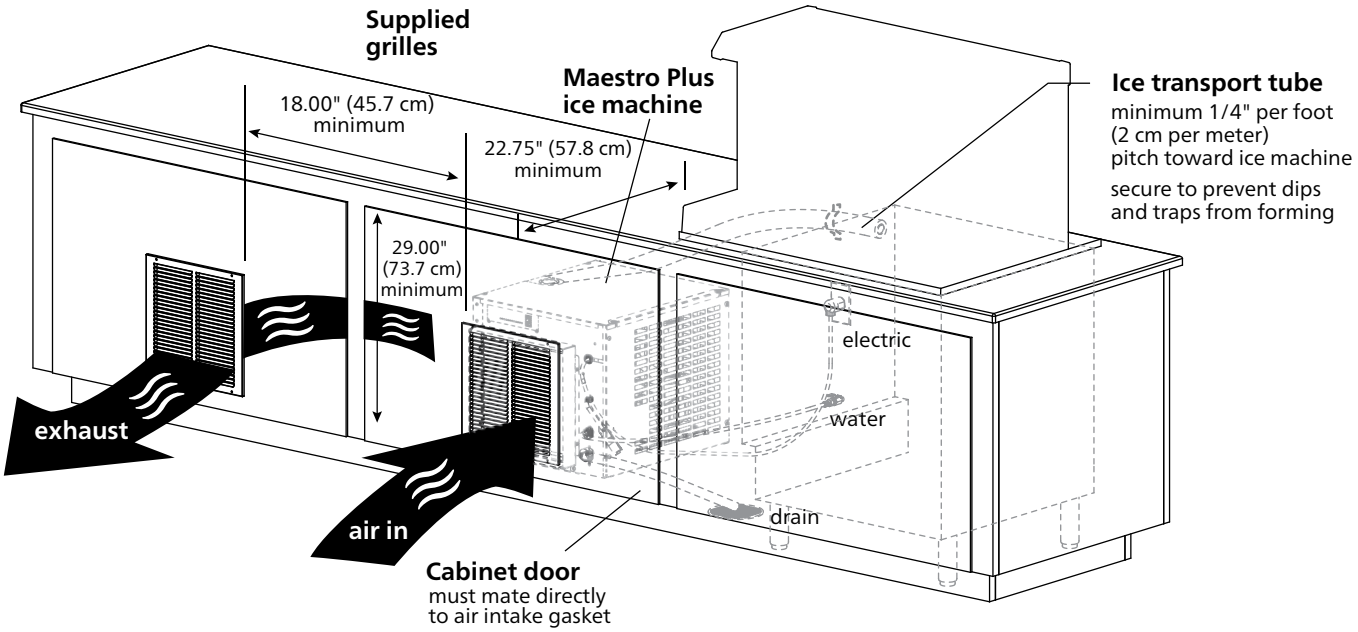

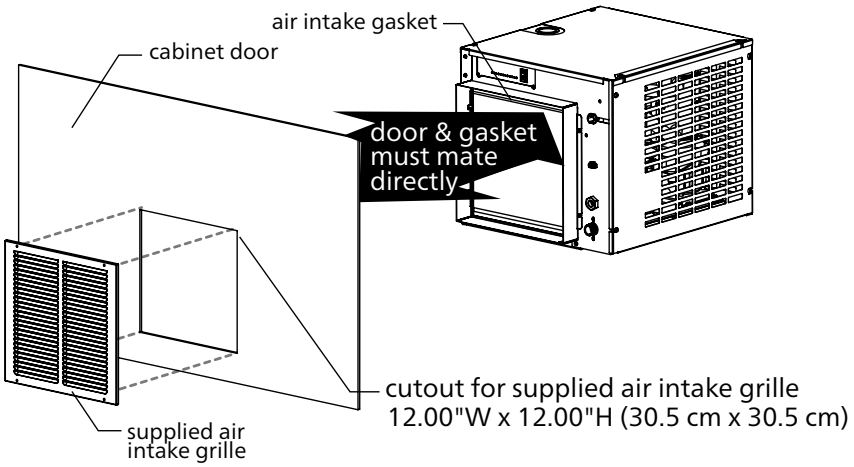

completed installation with gasket and door in place

side view

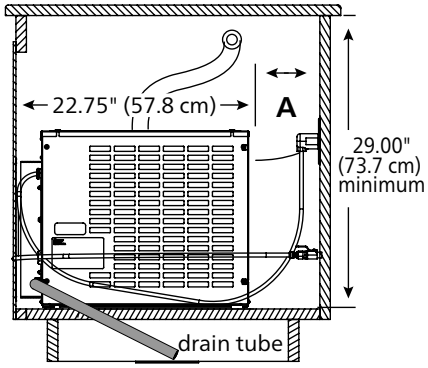

A: additional 3" (7.6 cm) required if receptacle located directly behind unit.

Important specifier notes for using Follett supplied grilles

1. The supplied exhaust grille must be located at least 18.00" (45.7 cm) from the supplied air intake grille (exhaust air must not recirculate with intake air).
2. Cabinet interior must be open to allow for unrestricted exhaust air flow.
3. Ice transport tube needs minimum 1/4" per foot (2 cm per meter) pitch toward ice machine and should be secured to prevent dips and traps from forming.
4. Cabinet door must mate directly to air intake gasket.
5. Cabinet interior must provide a minimum clear space of 22.75" deep (57.8 cm) by 29.00" high (73.7 cm).
6. Supplied grilles must meet minimum requirements for open air space shown above.
7. Utilities should be conveniently located as shown.

Using grilles by others/alternate cabinet ventilation

Cabinets with ventilation or louvers other than those provided by Follett require special consideration to provide proper ventilation. Recirculation of hot air will reduce ice machine performance and can cause ice machine outages.

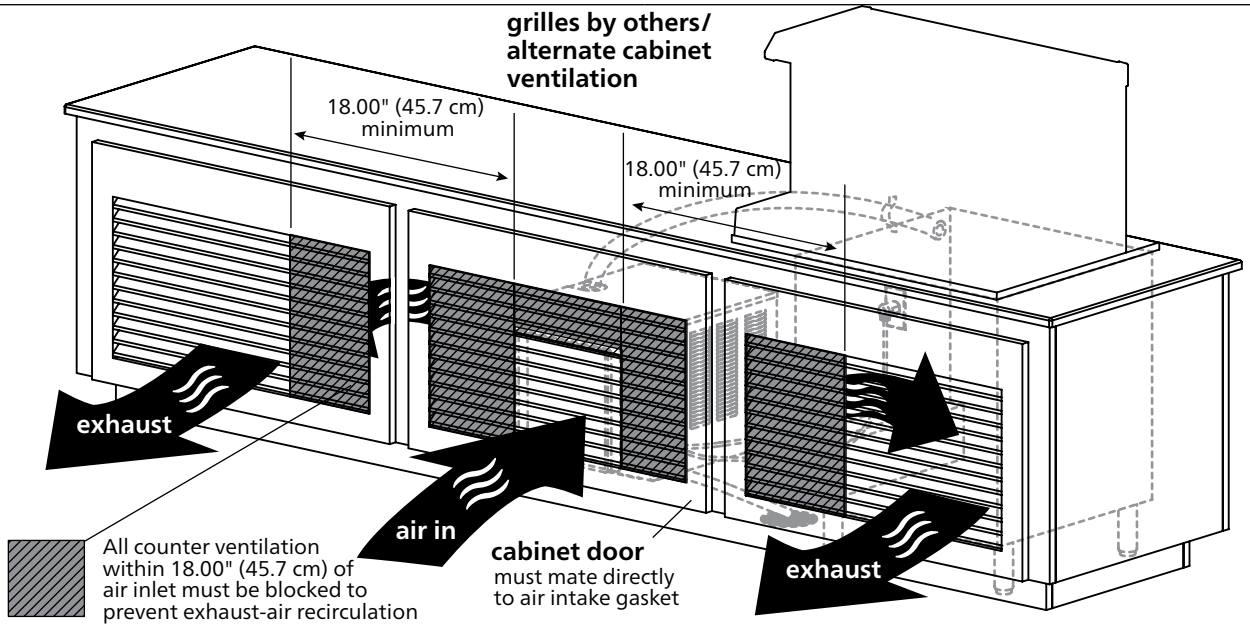

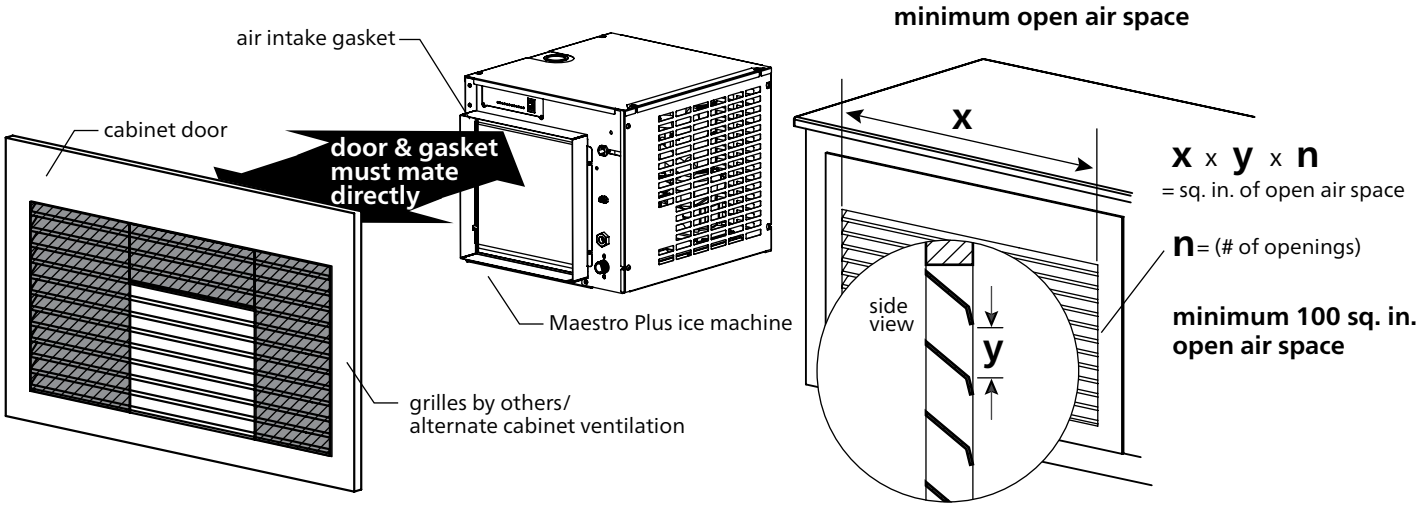

Important specifier notes for using grilles supplied by others/alternate cabinet ventilation

1. Exhaust must be at least 18.00" (45.7 cm) from air intake (exhaust must not recirculate with intake air).
2. Cabinet interior must be open to allow for unrestricted exhaust air flow.
3. Ice transport tube needs minimum 1/4" per foot (2 cm per meter) pitch toward ice machine and should be secured to prevent dips and traps from forming.
4. Ducting must be provided if cabinet door does not mate directly to air intake gasket.
5. Cabinet interior must provide a minimum clear space of 22.75" deep (57.8 cm) by 29.00" high (73.7 cm).
6. Grilles by others must meet minimum requirements for open air space shown above.
7. Utilities should be conveniently located as shown.

4 – Maestro Plus ice machine mounting accessories

Optional wall mount bracket

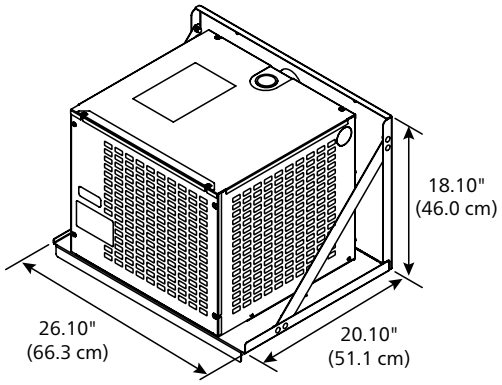

Optional machine stand

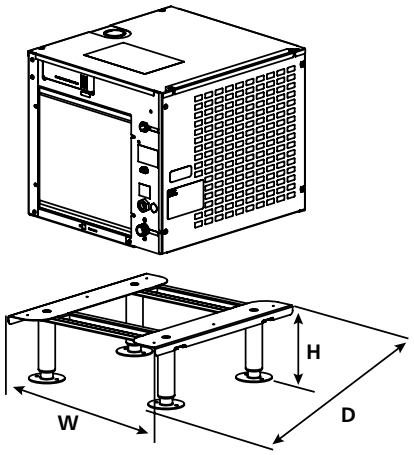

W – 18.63" (47.3 cm)
D – 20.75" (52.7 cm)
H – 6.80" – 8.30" (17.3 cm – 21.1cm)

Optional slide out accessory

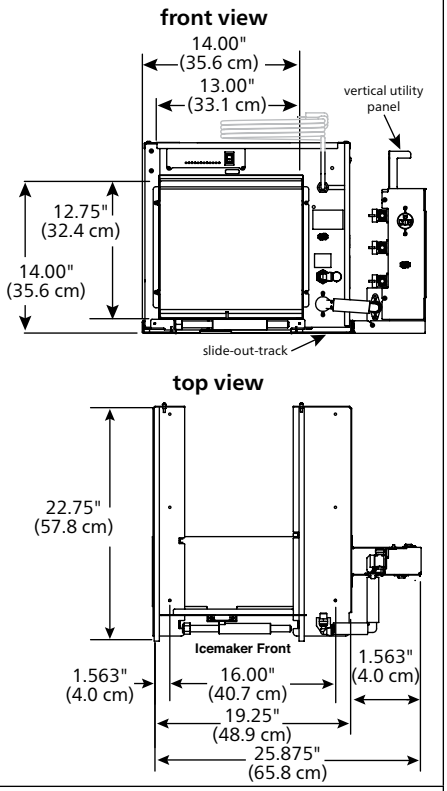

Important specifier notes

1. For secure wall mounting, specify optional wall mount bracket.
2. Wall and fasteners must support the weight of the ice machine, bracket, supply water and ice. Use of a backing board may be required with hollow wall construction.
3. Machine stand mounting adds 6.80" (17.3 cm) to height of ice machine.
4. No dips in tube routing allowed.
5. Ice transport tube needs minimum 1/4" per foot (2 cm per meter) pitch toward ice machine and should be secured to prevent dips and traps from forming.

5 – Maestro Plus ice tube runs – specifier guidelines

Long tube runs for RIDE remote ice delivery equipment

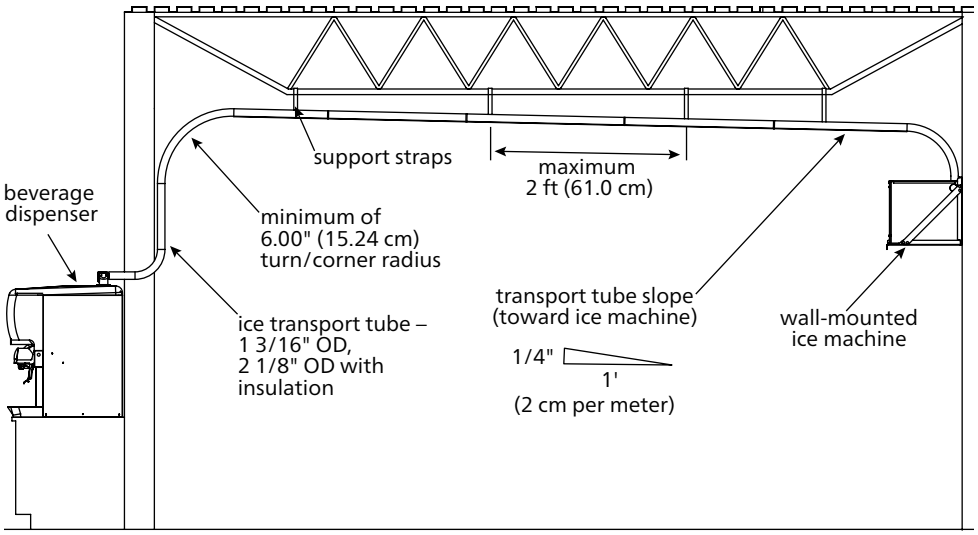

Important specifier notes:

1. 20' (6 m) maximum ice transport tube run.
2. Tubing routing bends must have a 6.00" (15.24 cm) radius or larger.
3. If not supported from underneath, secure insulated ice transport tube at least every 2' (61.0 cm) to prevent dips or traps.
4. Relative humidity levels above 80% in areas where the ice machine or ice transport tube are located may produce excessive condensation that will cause water damage.
5. Contact factory for recommendations on running tubing through a decorative soffit or chase.

Ice production – Maestro Plus 414 Series

Inlet water temperature F (C)	Ambient air temperature F (C)				
	60 (16)	70 (21)	80 (27)	90 (32)	lb (kg) production in 24 hr
50 F (10 C)	454 (206)	425 (193)	397 (180)	370 (168)	
60 F (16 C)	435 (197)	407 (185)	381 (173)	355 (161)	
70 F (21 C)	416 (189)	390 (177)	365 (166)	340 (154)	
80 F (27 C)	401 (182)	379 (172)	353 (160)	327 (148)	
90 F (32 C)	387 (176)	367 (166)	340 (154)	313 (142)	

ENERGY STAR and the ENERGY STAR mark are registered trademarks owned by the U.S. Environmental Protection Agency.
ICE•DEVICE, ICE PRO, MAESTRO PLUS, SAFECLEAN PLUS and VISION are trademarks of Follett Products, LLC.
CHEWBLET, FOLLETT and RIDE are registered trademarks of Follett Products, LLC, registered in the US.
Follett reserves the right to change specifications at any time without obligation. Certifications may vary depending on country of origin.

1069-20260911 | © Follett Products, LLC

801 Church Lane | Easton, PA 18040, USA
1.800.523.9361 | 1.610.252.7301 | follettice.com